CAGE CLAMP®

The universal connection for solid, stranded and fine-stranded conductors

Handling:
Open clamping unit,
insert the conductor,
release clamp – done!



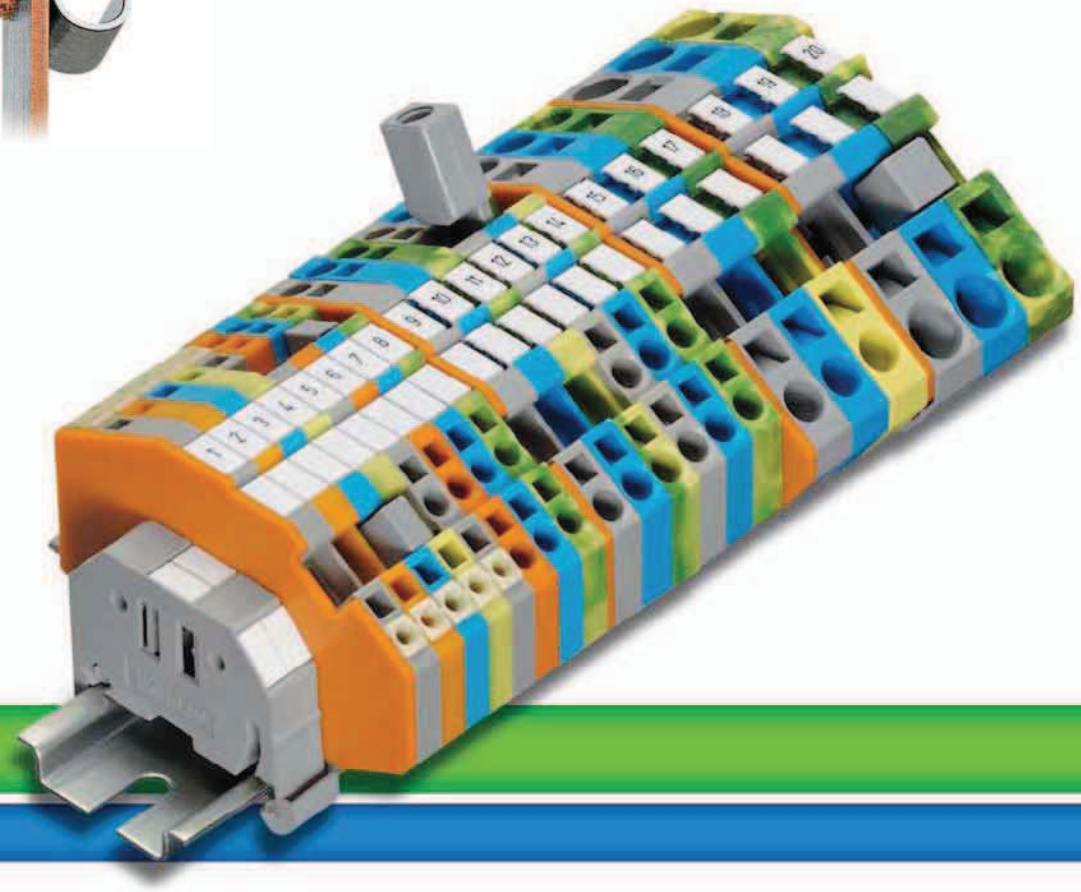

5



Through, Ground Conductor and
Ex Terminal Blocks
0.08 mm² to 35 mm² (AWG 28 - 2) — 780 - 785 Series — 295 — 298



N-Conductor Disconnect and Power Distribution
Disconnect Terminal Blocks
0.08 mm² to 35 mm² (AWG 28 - 2) — 780 - 785 Series — 299 — 301

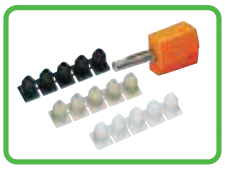

Accessories for Rail-Mounted Terminal Blocks
– Banana Plugs — 198
– Insulation Stops — 199

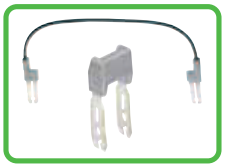

– Push-In Type Wire Jumpers — 201
– Staggered Jumpers — 201
– Comb-Style Jumper Bars — 200
– Test Plug Modules — 194 — 197

TOPJOB® Classic Rail-Mounted Terminal Blocks, 780 to 785 Series – Description and Handling –

CAGE CLAMP®

Assembly

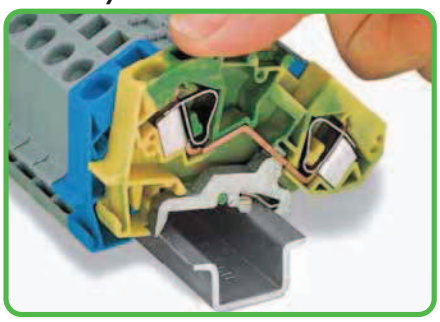

By snapping a ground conductor terminal block onto the carrier rail, a direct electrical connection is automatically made to the rail.

Removal

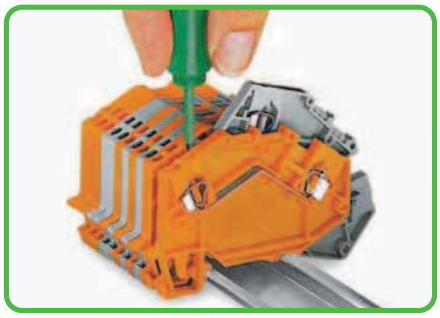

Removing a terminal block from the assembly.

Screwless disconnect slide link

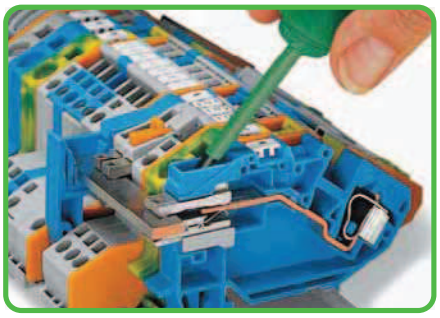

Operating an N-disconnect slide link.

Commoning

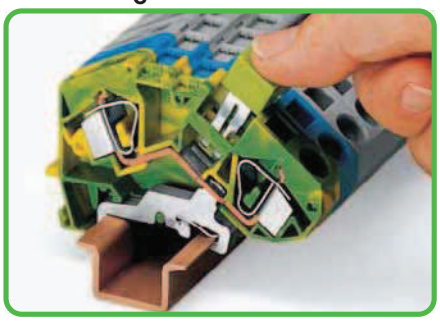

Commoning ground conductor terminal blocks with through terminal blocks is possible in one direction only (via rear side of terminal block) using adjacent jumpers. In addition to the required marking of these blocks, use yellow-green adjacent jumpers.

Commoning



Staggered jumpers for sophisticated circuit requirements. Push jumpers down firmly until fully inserted.
For additional notes, see page 201.

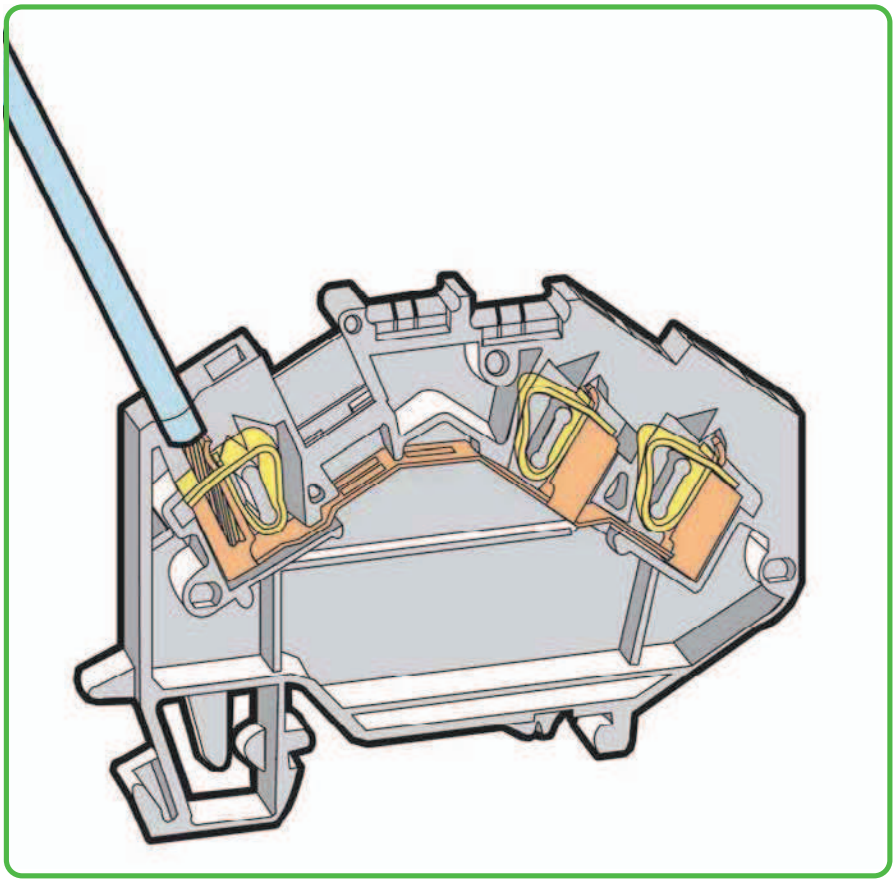

Testing

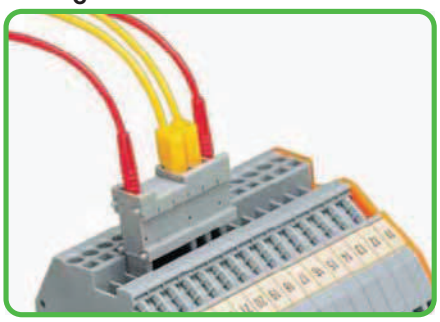

Test plug module assembly. Combining test plug and spacer modules.

Insulation stop

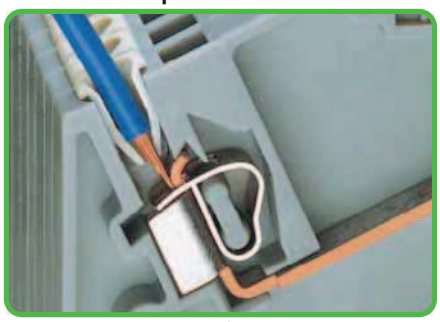

Prevents conductor insulation from being pushed into the clamping unit.
Available for terminal blocks up to 4 mm²/AWG 12.

Marking



Marking via WMB Multi markers and WFB continuous marking strips (see Section 13).

CAGE CLAMP® clamps the following copper conductors:*

solid	stranded	fine-stranded, also with tinned single strands	fine-stranded, tip-bonded	fine-stranded, with ferrule ❶ (gastight crimped)	fine-stranded, with pin terminal (gastight crimped)

* For aluminum conductors, see notes in Section 14.

❶ When using ferruled conductors, it is necessary to use a terminal block one size larger than the nominal cross section of the wire.

TOPJOB® Classic
Through/Ground Conductor/Shield and Ex Terminal Blocks 2.5 mm²
780 Series

CAGE CLAMP®

0.08 - 2.5 mm²	AWG 28 - 12 *
1000 V/8 kV/3 ❶	600 V, 20 A
I_N 24 A	600 V, 20 A

Terminal block width 5 mm / 0.197 in
8 - 9 mm / 0.33 in ❷

0.08 - 2.5 mm²	AWG 28 - 12 *
1000 V/8 kV/3 ❶	600 V, 20 A
I_N 24 A	600 V, 25 A

Terminal block width 5 mm / 0.197 in
8 - 9 mm / 0.33 in ❷

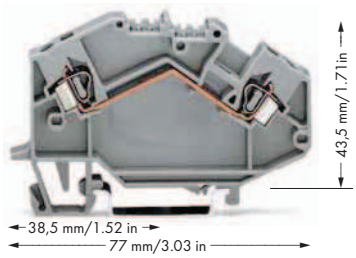

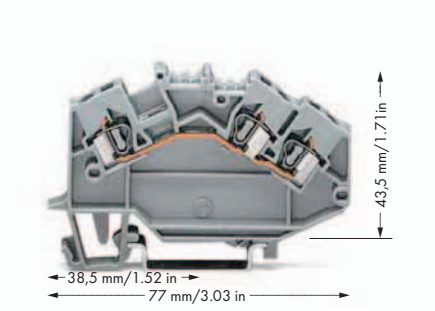

* AWG 12: THHN, THWN

❶ 1000 V = rated voltage
8 kV = rated surge voltage
3 = pollution degree
(also see Section 14)

❷ Strip length, see packaging or instructions.

❸ Suitable for Ex i applications

❹ Suitable for Ex e II applications
0.2 mm² - 2.5 mm²/AWG 24 - 12*
690 V, 23 A
(also see Section 14)
Using staggered jumpers reduces the maximum rated voltage to 275 V.

❺ See application notes for:
Test plug modules, pages 194 – 196
Banana plug, page 198
Insulation stop, page 199
Comb-style jumper bar, page 200
Operating tool, page 200
Staggered jumper, page 201
Push-in type wire jumper, page 201

	Item No.	Pack. Unit
2-conductor through terminal block		
gray	**780-601**	50
blue	**780-604** ❸	50
orange	**780-602**	50
light gray	**780-992** ❹	50
2-conductor ground terminal block		
green-yellow	**780-607**	50
green-yellow	**780-607/999-950** ❹	50
Other terminal blocks with the same profile:		
N-disconnect	**780-613**	Page 299

	Item No.	Pack. Unit
3-conductor through terminal block		
gray	**780-631**	50
blue	**780-651** ❸	50
orange	**780-654**	50
light gray	**780-993** ❹	50
3-conductor ground terminal block		
green-yellow	**780-637**	50
green-yellow	**780-637/999-950** ❹	100
3-conductor shield terminal block		
white	**780-640**	50

780 Series Accessories

Appropriate marking systems:
WMB/WFB (see Section 13)

End and intermediate plate, 1.5 mm thick
orange **780-317** 100 (4x25)

Ex e/Ex i separator, orange,
3 mm thick
125.5 mm **209-192** 50 (2x25)

Insulation stop, ❺
5 pcs/strip,
0.08 - 0.2 mm² "s" (0.14 mm² "f-st")
white **280-470** 200 (8x25)

Insulation stop, ❺
5 pcs/strip,
0.25 - 0.5 mm²
light gray **280-471** 200 (8x25)

Insulation stop, ❺
5 pcs/strip,
0.75 - 1 mm²
dark gray **280-472** 200 (8x25)

Adjacent jumper, insulated,
I_N = I_N terminal block
gray **280-402** 200 (8x25)
yellow-green **280-422** 200 (8x25)

Alternate jumper, insulated,
I_N = I_N terminal block
gray **280-409** 100 (4x25)

Staggered jumper, ❺
insulated,
width 5 mm/0.197 in,
I_N 24 A
from 1 to 2 **780-452** 100 (4x25)
from 1 to 3 **780-453** 100 (4x25)
from 1 to 4 **780-454** 100 (4x25)
from 1 to 5 **780-455** 50 (2x25)
from 1 to 6 **780-456** 50 (2x25)
from 1 to 7 **780-457** 50 (2x25)
from 1 to 8 **780-458** 50 (2x25)

Push-in type wire jumper, ❺
insulated,
I_N 9 A,
wire size 0.75 mm²
L = 60 mm **249-125** 10
L = 110 mm **249-126** 10
L = 250 mm **249-127** 10

Protective warning marker,
with high-voltage symbol, black,
for 5 terminal blocks
yellow **280-415** 100 (4x25)

Comb-style jumper bar, insulated, ❺
I_N = I_N terminal block
2-way **280-482** 200 (8x25)
3-way **280-483** 200 (8x25)

Accessories

Alternate comb-style jumper bar,
insulated,
I_N = I_N terminal block
2-way **280-492** 200 (8x25)

Operating tool, of insulating material ❺
2-way **280-432** 1
3-way **280-433** 1

Test plug module, ❺
can be snapped together,
5 mm wide
gray **280-418** 100 (4x25)

Spacer module,
can be snapped together,
5 mm wide
gray **280-419** 100 (4x25)

Test plug adapter, 5 mm wide,
for terminal blocks 1.5 - 4 mm²,
for 210-137 test plug 2.3 mm Ø
gray **280-404** 100 (4x25)

Test plug,
with 500 mm cable,
2.3 mm Ø
yellow **210-137** 50

Test plug adapter, 8.3 mm wide,
for terminal blocks 1.5 - 10 mm²,
for test plug 4 mm Ø
gray **209-170** 50 (2x25)

Test plug adapter, 6 mm wide,
with CAGE CLAMP®,
for 0.08 - 2.5 mm²
I_N 24 A **281-407** 100 (4x25)

Banana plug, ❺
for socket 4 mm Ø,
color mixed
215-111 50

TOPJOB® tool, specially designed blade,
suitable for all TOPJOB® terminal blocks
777-310 1

Screwless end stop,
for DIN 35 rail,
10 mm wide
gray **249-117** 50 (2x25)

Screwless end stop,
for DIN 35 rail,
6 mm wide
gray **249-116** 100 (4x25)

For list of approvals and user guide, see pages 634 to 637.