Self-assembly of individual female plugs:
Using modular female plugs from the X-COM®-SYSTEM, female plugs can be customized for applications requiring varying numbers of poles (e.g., when designing prototypes).

Modules and pole numbers:
A self-assembled female plug consists of:
Base module with integrated end plate,
up to 13 center modules (corresponding to a 15-pole female plug = maximum number of poles),
end module.

Intended use:
According to EN 61984, connectors without current interrupting capacity shall not be mated and unmated when live or under load.

Assembly:
The appropriate mounting tool shall be used to guarantee that the individual modules are properly attached to each other without damaging the locking latches.

1. 500 V = rated voltage
   6 kV = rated surge voltage
   3 = pollution degree
   (also see Section 14)
2. See current-carrying capacity curve at www.wago.com
3. Strip length, see packaging or instructions.

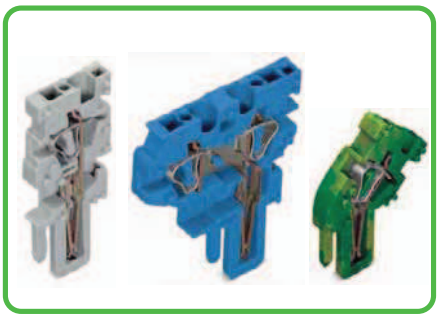
End module


Center module

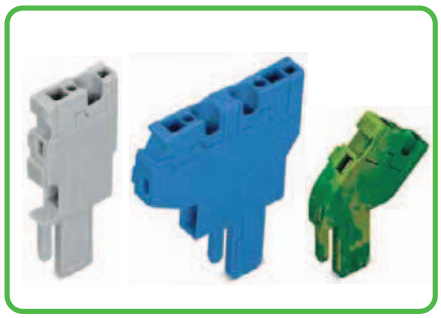
Base module

Example: 5-Pole, 1-Conductor Female Plug



Base module with integrated end plate
769-501/000-016

Center module
769-502/000-006

Center modules
769-502

End module
769-503

X-COM®-SYSTEM
1-Conductor Female Plugs

CAGE CLAMP®

0.08 - 4 mm² | AWG 28 - 12 500 V/6 kV/3 ❶ I_N 32 A ❷ module width 5 mm / 0.197 in 8 - 9 mm / 0.33 in ❸	0.08 - 4 mm² | AWG 28 - 12 500 V/6 kV/3 ❶ I_N 32 A ❷ module width 5 mm / 0.197 in 8 - 9 mm / 0.33 in ❸









❶ 500 V = rated voltage
6 kV = rated surge voltage
3 = pollution degree
(also see Section 14)

❷ See current-carrying capacity curve at www.wago.com

❸ Strip length, see packaging or instructions.

Pole No.	Item No.	Pack. Unit
1-conductor female plug with ground base module		
(green-yellow), for insertion into carrier terminal blocks		
or male connectors, with coding fingers, commoning		
possible with miniature adjacent jumpers		
3	**769-103/000-038**	50
1-conductor female plug with ground end module		
(green-yellow), for insertion into carrier terminal blocks		
or male connectors, with coding fingers, commoning		
possible with miniature adjacent jumpers		
3	**769-103/000-039**	50

Pole No.	Item No.	Pack. Unit
1-conductor female plug with ground base module		
(green-yellow), for insertion into carrier terminal blocks		
or male connectors, with coding fingers, commoning		
possible with miniature adjacent jumpers		
5	**769-105/000-038**	50
1-conductor female plug with ground end module		
(green-yellow), for insertion into carrier terminal blocks		
or male connectors, with coding fingers, commoning		
possible with miniature adjacent jumpers		
5	**769-105/000-039**	50

Accessories for 1-Conductor Female Plugs

Appropriate marking system:
Miniature WSB (see Section 13)

Insulation stop,			
	5 pcs/strip,		
	0.08 - 0.2 mm² "s" (0.14 mm² "f-st")		
	white	**769-470**	200 (8x25)
Insulation stop,			
	5 pcs/strip,		
	0.25 - 0.5 mm²		
	light gray	**769-471**	200 (8x25)
Insulation stop,			
	5 pcs/strip,		
	0.75 - 1 mm²		
	dark gray	**769-472**	200 (8x25)
Miniature adjacent jumper, insulated,			
	I_N 24 A		
	gray	**769-402**	100 (4x25)
Locking lever,			
	female plugs with 1-pole		
	gray	**769-428**	100 (4x25)
	orange	**769-429**	100 (4x25)
Locking lever,			
	female plugs with 2-poles or more		
	orange	**769-431**	100 (4x25)
	gray	**769-430**	100
Test plug,			
	with 500 mm cable,		
	2 mm Ø		
	red	**210-136**	50
Test plug,			
	with 500 mm cable,		
	2.3 mm Ø		
	yellow	**210-137**	50

Protective warning marker,			
	with high-voltage symbol, black,		
	for 5 terminal blocks		
	yellow	**280-415**	100 (4x25)
Strain relief plate,			
	gray		
	2- to 3-pole	**769-411**	100 (4x25)
Strain relief plate,			
	gray		
	4- to 5-pole	**769-412**	100 (4x25)
Snap-on type relief housing,			
	consisting of strain relief support/housing		
	3-pole	**769-1603**	25
Snap-on type relief housing,			
	consisting of strain relief support/housing		
	5-pole	**769-1605**	25
Operating lever, loose,			
	for female plugs and male connectors with		
	CAGE CLAMP®		
		769-434	2000 (20x100)
Miniature WSB Quick marking system,			
	10 strips with 10 markers per card,		
	5 mm wide markers		
	plain	**248-501**	5

For list of approvals and user guide, see pages 634 to 637.

Snap-on Type Strain Relief Housings for 769 Series Female Plugs and Male Connectors with CAGE CLAMP® Connection

Snap-on type relief housing	Snap-on type relief housing



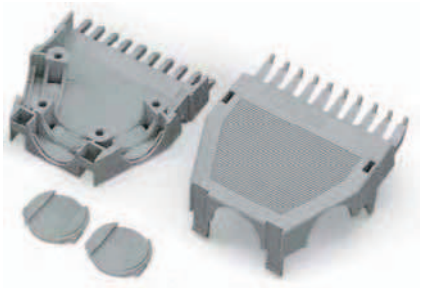

1 cable outlet rear, 2- to 5-pole only suitable for cable ties (Fa. Hellermann – not offered by WAGO) not for cable clamp

2 1 cable outlet rear

3 2 cable outlets, 1 cover

4 3 cable outlets, 2 covers

Pole No.	Item No.	Pack. Unit
Snap-on type relief housing, consisting of strain relief support/housing, gray		
2	**769-1602** 1	25
3	**769-1603** 1	25
4	**769-1604** 1	25
5	**769-1605** 1	25

Pole No.	Item No.	Pack. Unit
Snap-on type relief housing, consisting of strain relief support/housing, gray		
6	**769-1606** 2	25
7	**769-1607** 2	25
8	**769-1608** 3	25
9	**769-1609** 3	25
10	**769-1610** 4	25
11	**769-1611** 4	25
12	**769-1612** 4	25
13	**769-1613** 4	25
14	**769-1614** 4	25
15	**769-1615** 4	25

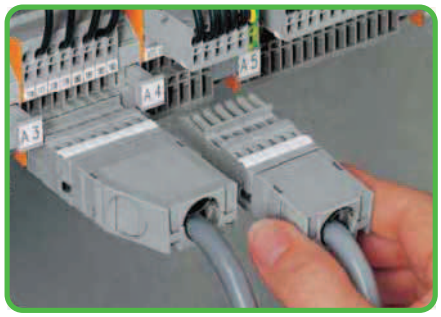

Application

Item-Specific Accessories

WSB Quick marking system,



10 strips with 10 markers per card, for terminal widths 5 - 17.5 mm

plain **209-501** 5

Item-Specific Accessories

Cable clamp,



for strain relief from 7-pole and on **209-174** 25

Fixing screw,



for cable clamp for 7 or more poles **209-173** 50

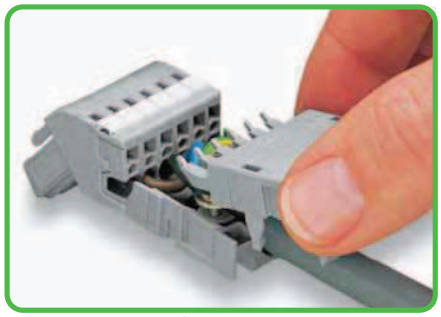

Snapping on strain relief housing

Dimensions for strain relief housings

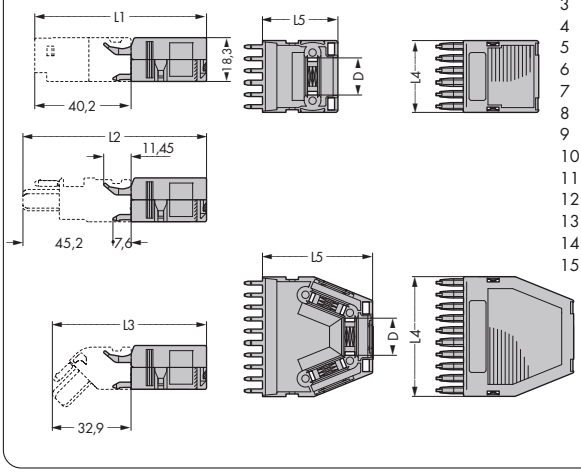

No. of poles	L1	L2	L3	L4	L5	D
2	71.7	76.7	64.4	10	31.5	5
3	71.7	76.7	64.4	15	31.5	9.7
4	71.7	76.7	64.4	20	31.5	14
5	71.7	76.7	64.4	25	31.5	14
6	71.7	76.7	64.4	30	31.5	15.5
7	77.7	81.7	69.4	35	36.5	15.5
8	86.2	91.2	78.9	40	46	15.5
9	86.2	91.2	78.9	45	46	15.5
10	86.2	91.2	78.9	50	46	15.5
11	86.2	91.2	78.9	55	46	15.5
12	86.2	91.2	78.9	60	46	15.5
13	86.2	91.2	78.9	65	46	15.5
14	86.2	91.2	78.9	70	46	15.5
15	86.2	91.2	78.9	75	46	15.5

Dimensions in mm