Karta danych technicznych
Trunking, type WDK 20020

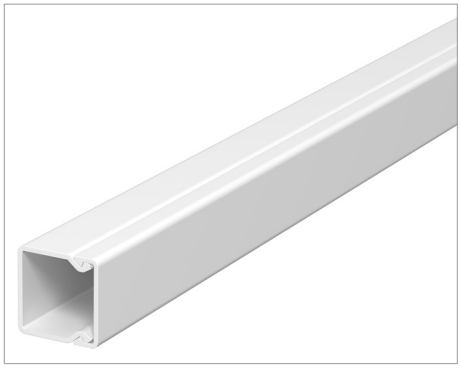

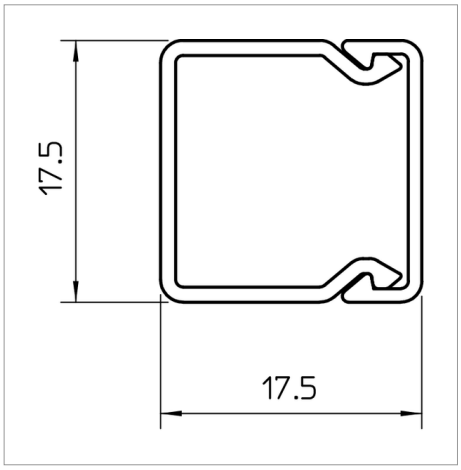

Trunking cover and base with base perforation.

Type	Colour	Length mm	Pack. m	Weight kg/100 m	Nr kat.
WDK20020RW	Pure white; RAL 9010	2000	48	11.100	6191037
WDK20020CW	Cream; RAL 9001	2000	48	11.100	6025153
WDK20020LGR	Light grey; RAL 7035	2000	48	11.100	6025102
WDK20020GR	Stone grey; RAL 7030	2000	48	11.100	6025110

PVC Polyvinylchloride /m

Legenda



WDK trunking, trunking depth 20 mm


Nail device

CE Communautés Européennes, EC declaration of conformity according to EC directives



Verband der Elektrotechnik, Elektronik, Informationstechnik e.V., Germany