Karta danych technicznych
Trunking, type WDK 15030

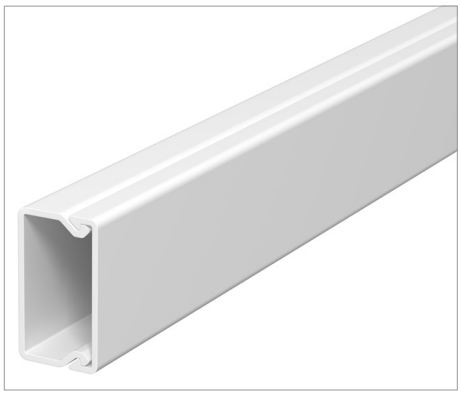

Trunking cover and base with base perforation.

Type	Colour	Length mm	Pack. m	Weight kg/100 m	Nr kat.
WDK15030RW	Pure white; RAL 9010	2000	48	19.500	6191010
WDK15030CW	Cream; RAL 9001	2000	48	19.500	6025013
WDK15030GR	Stone grey; RAL 7030	2000	48	19.500	6025005

PVC Polyvinylchloride /m

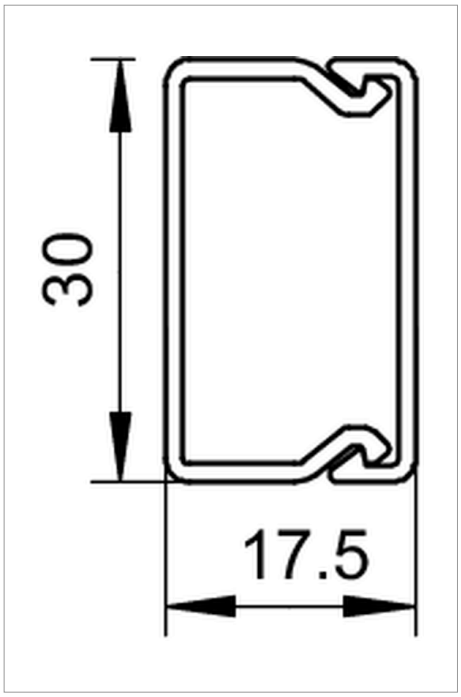

Legenda



WDK trunking, trunking depth 15 mm



Nail device

CE Communautés Européennes, EC declaration of conformity according to EC directives



Verband der Elektrotechnik, Elektronik, Informationstechnik e.V., Germany