# Karta danych technicznych
# Trunking, type WDK-N 20050

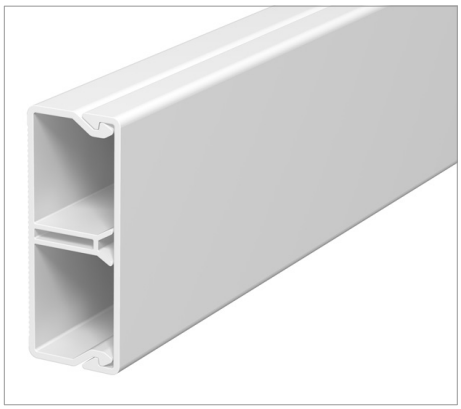

Trunking cover and base with nail strip and base perforation.

| Type | Colour | Length<br>mm | Pack.<br>m | Weight<br>kg/100 m | Nr kat. |
|---|---|---|---|---|---|
| WDK-N20050RW | Pure white; RAL 9010 | 2000 | 42 | 37.000 | 6168744 |
| WDK-N20050CW | Cream; RAL 9001 | 2000 | 42 | 37.000 | 6168728 |

PVC Polyvinylchloride /m

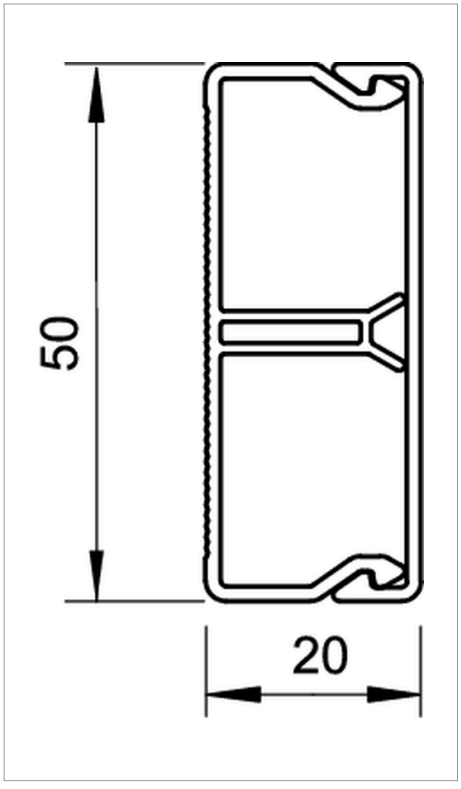

# Legenda



WDK-N trunking, trunking depth 20 mm


Nail device

CE Communautés Européennes, EC declaration of conformity according to EC directives



Verband der Elektrotechnik, Elektronik, Informationstechnik e.V., Germany