Karta danych technicznych
Trunking, type WDK 40040

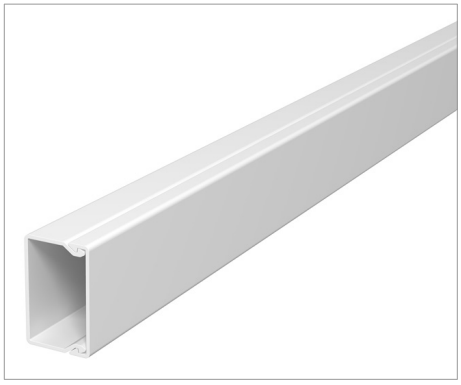

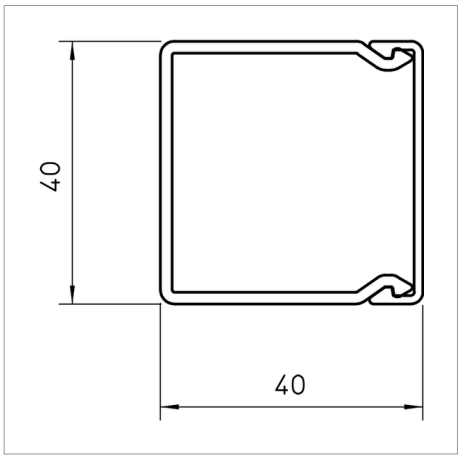

Trunking cover and base with base perforation.

Type	Colour	Length mm	Pack. m	Weight kg/100 m	Nr kat.
WDK40040RW	Pure white; RAL 9010	2000	36	42.100	6191126
WDK40040CW	Cream; RAL 9001	2000	36	42.100	6025412
WDK40040LGR	Light grey; RAL 7035	2000	36	42.100	6027016
WDK40040GR	Stone grey; RAL 7030	2000	36	42.100	6025447

PVC Polyvinylchloride /m

Legenda



WDK trunking, trunking depth 40 mm



Nail device

CE Communautés Européennes, EC declaration of conformity according to EC directives



Verband der Elektrotechnik, Elektronik, Informationstechnik e.V., Germany