Disconnect Terminal Blocks for Test and Measurement of Transformer Circuits, 282 Series

Preparing the shorting path for the current transformer



Insertion of insulated, touchproof adjacent jumpers into the protected shorting position.

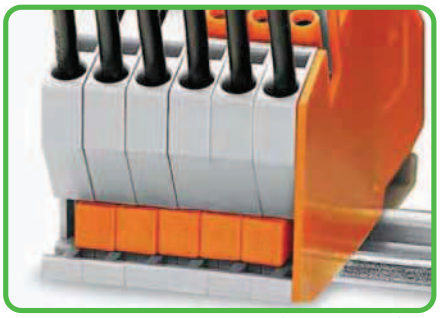

Terminal strip permanently prepared for current transformer circuits.

Lock-out

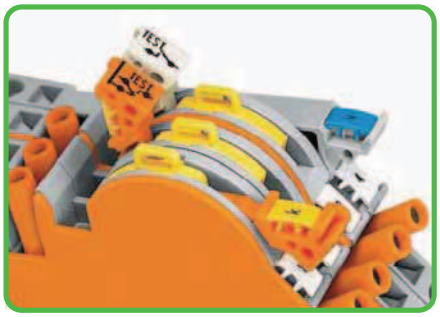

Lock-out has "snap" action into two notched positions preventing accidental operation of the disconnect link.

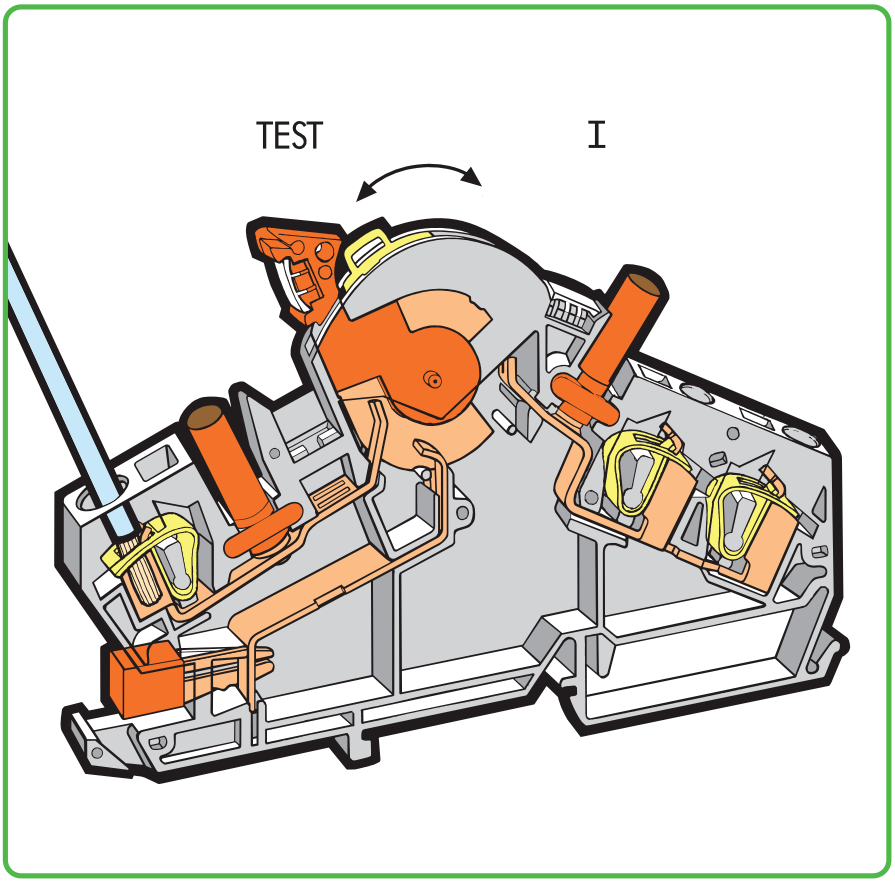

Locking cover for disconnect links



Transparent locking cover for 1 – 4 disconnect links can be snapped on
a) for mechanical interlocking for multipole switching
b) for protecting markers.

Interlocking link

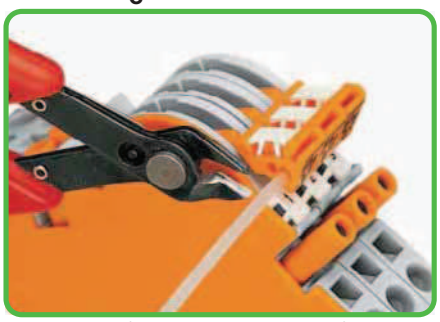

Interlocking link for mechanical interlocking of several links for multipole switching.

Touch-proof test sockets

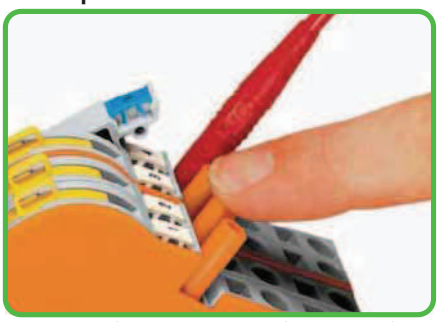

For touch-proof test sockets 4 mm Ø, for example mfd by Multi-Contact (not offered by WAGO).

Marking

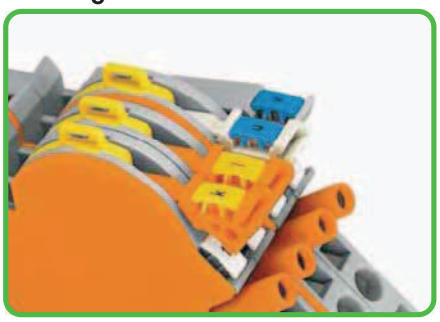

Marking with WMB Multi marking system.
For other systems, see Section 13.



CAGE CLAMP® clamps the following copper conductors:*

solid



stranded



fine-stranded, also with tinned single strands

* For aluminum conductors, see notes in Section 14.

– Description and Handling –

Disconnect link in notched position "I"

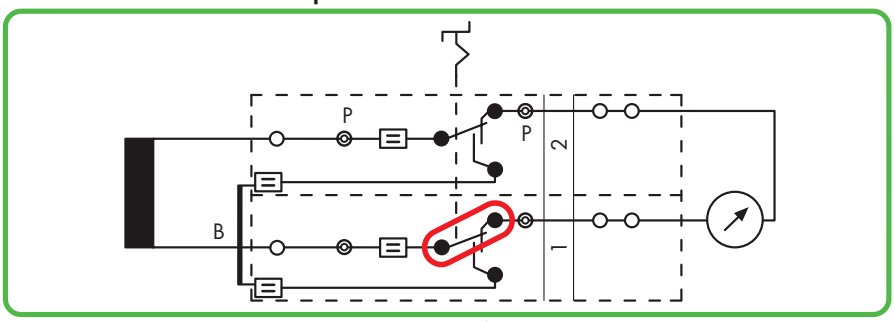

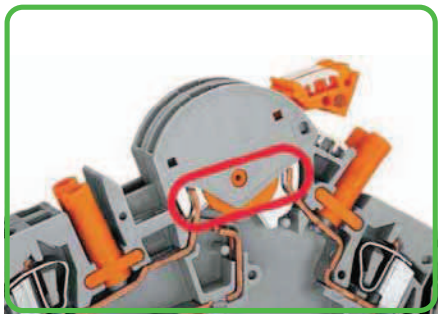

In position "I", the measuring instrument is connected to the transformer secondary.

B = shorting jumper, P = test socket

Disconnect link in transition from "I" –> "TEST" (terminal blocks 1 + 2)

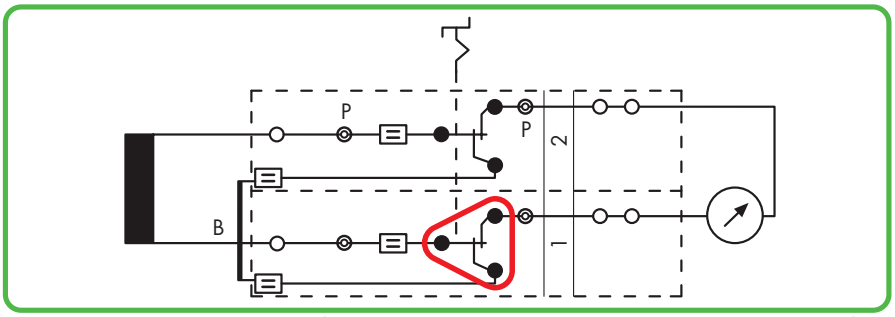

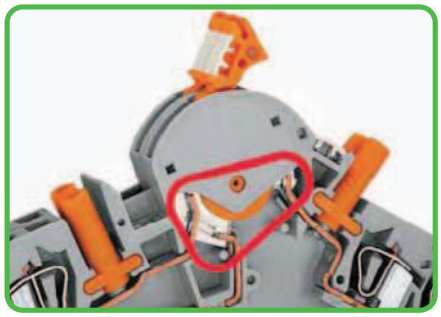

By moving the interlocked disconnect links from "I" to "TEST" the shorting path is activated without disconnection of the measuring instrument yet.

Disconnect link in notched position "TEST" (terminal blocks 1 + 2)

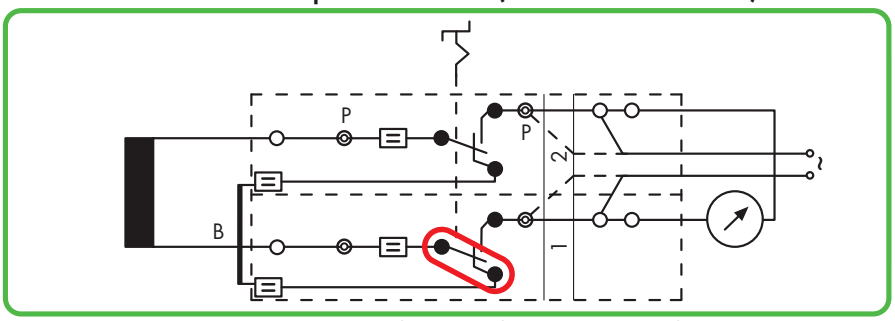

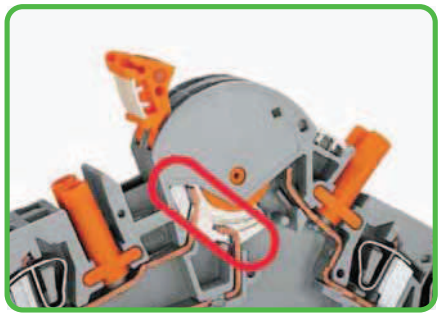

The measuring instrument is electrically disconnected from the transformer. In this position, if necessary, external voltage can be applied via sockets, or the 2nd CAGE CLAMP® connection for relay testing in transformer protection circuits.

Disconnect link in notched position "I" (terminal block 2)
Disconnect link in notched position "TEST" (terminal block 1)

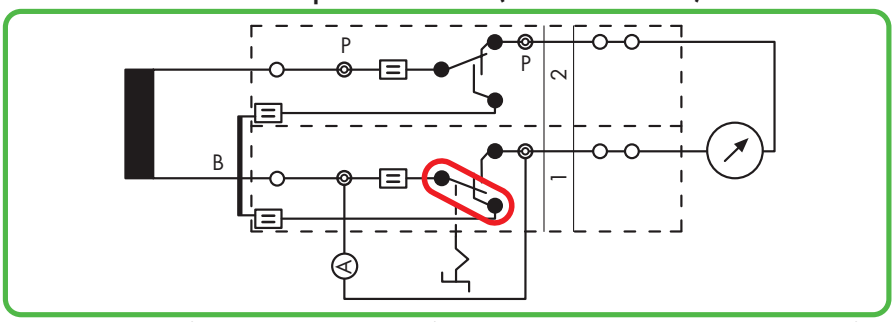

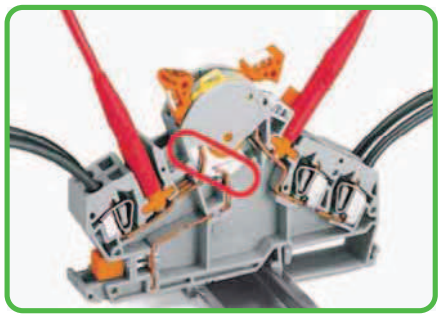

Measurement testing. Before moving the disconnect link of terminal block 1 into the notched position "TEST", the reference current meter must be inserted into the test socket of terminal block 1.



fine-stranded, tip-bonded



fine-stranded, with ferrule ❶ (gastight crimped)



fine-stranded, with pin terminal (gastight crimped)

❶ When using ferrules, the max. conductor cross section accommodated is one size smaller than max. rating of terminal block.

Circuit Configuration Examples

CAGE CLAMP® connection

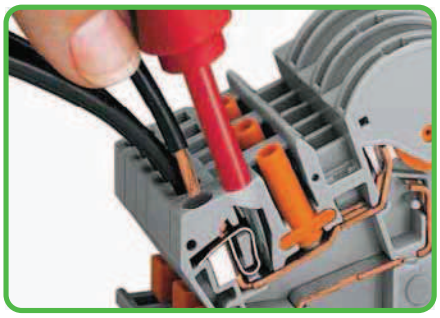

Conductor termination with operating tool (5.5 x 0.8) mm

Additional CAGE CLAMP®-connection

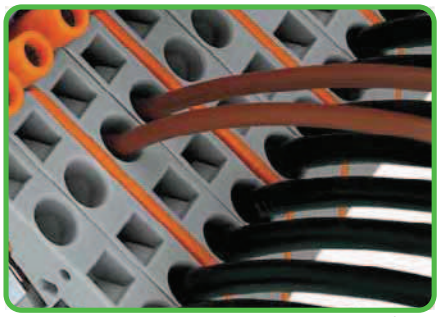

Additional CAGE CLAMP® connection on the side of the measuring instrument. For example: connecting wire commoning chains or applying an external voltage.

Commoning

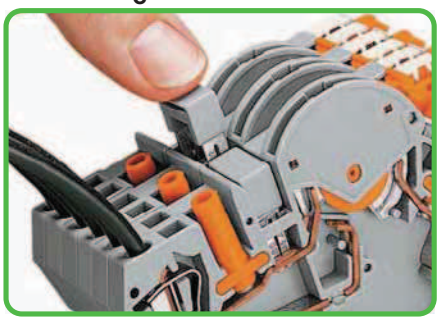

Additional commoning possible with adjacent jumper or testing option via 209-170 test plug adapter on transformer side.

Lock-out seal

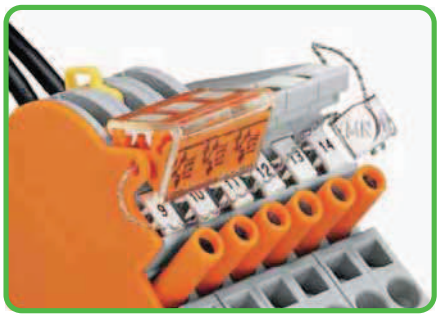

A lock-out seal can be used on the disconnect link in notched position "I".

Measuring set for a single-phase current transformer

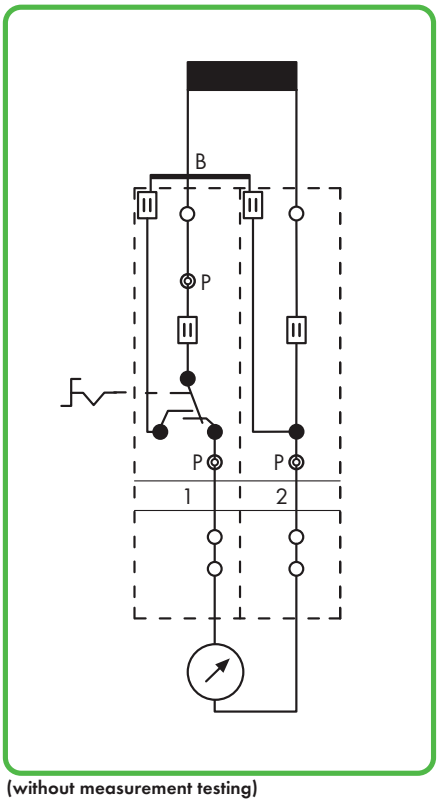

(without measurement testing)

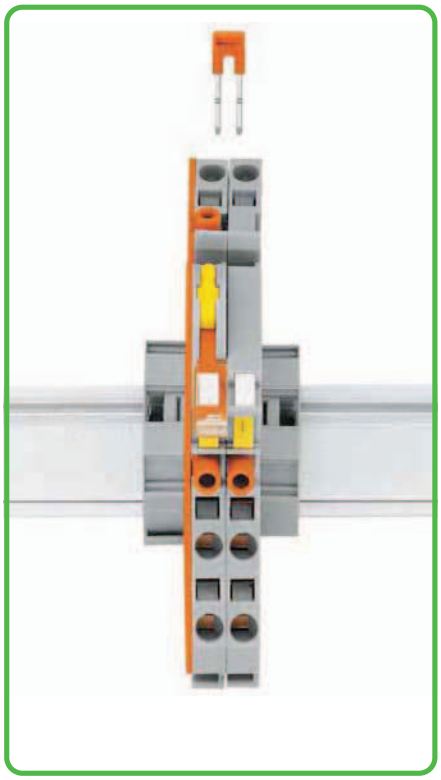

Terminal blocks required:

1 x disconnect/test terminal block	282-870
1 x through terminal block	282-865
1 x jumper, orange	282-424
1 x end plate, orange	282-386

in addition locking cover, lock-out

Measuring set for a single-phase voltage transformer

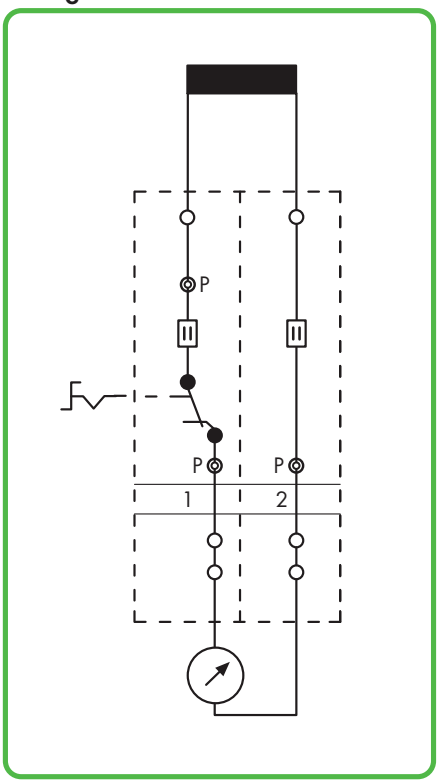

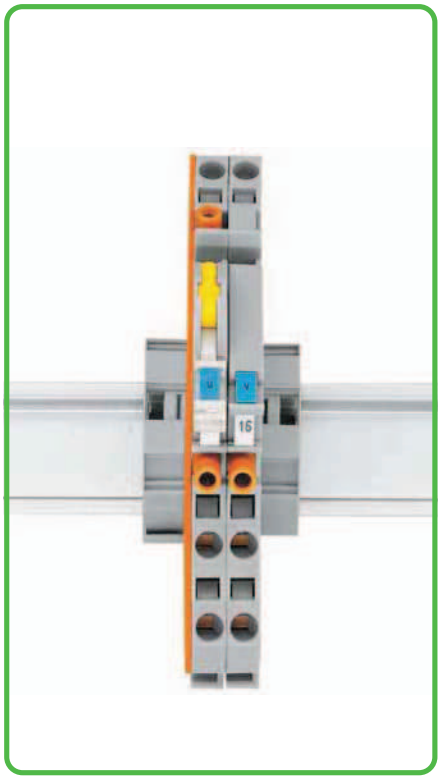

Terminal blocks required:

1 x disconnect/test terminal block	282-860
1 x through terminal block	282-866
1 x jumper, orange	282-424
1 x end plate, orange	282-386

in addition locking cover, lock-out

Measuring set for a 3-phase current transformer

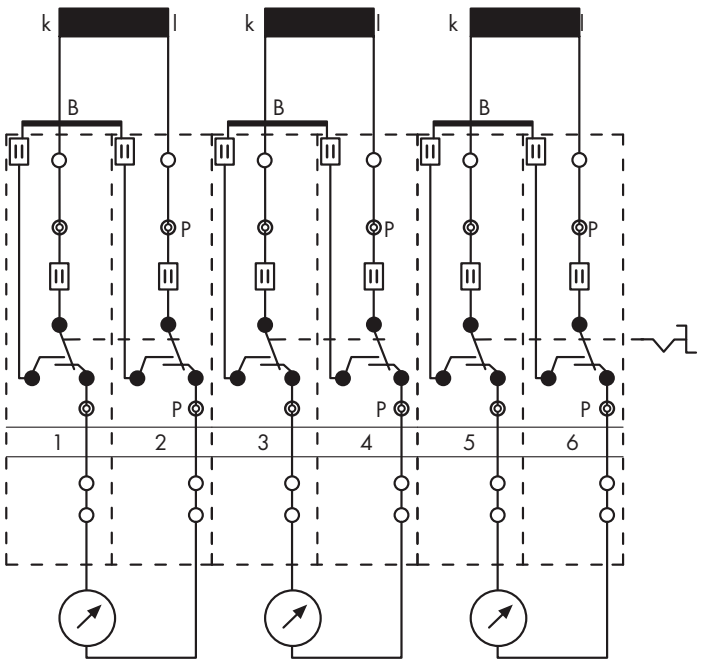

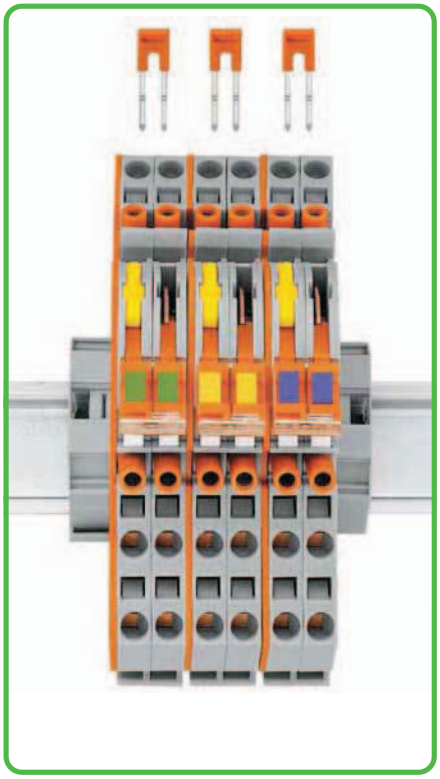

Pairs of disconnect links are interlocked by locking covers.
After the interlocking has been released, testing of the measured value is also possible.

B = shorting jumper, P = test socket

Terminal blocks required:

6 x disconnect/test terminal block	282-870
3 x jumper, orange	282-424
3 x end plate, orange	282-386

in addition locking links, locking covers, lock-outs

Measuring set for a 3-phase current transformer with 'Y' point

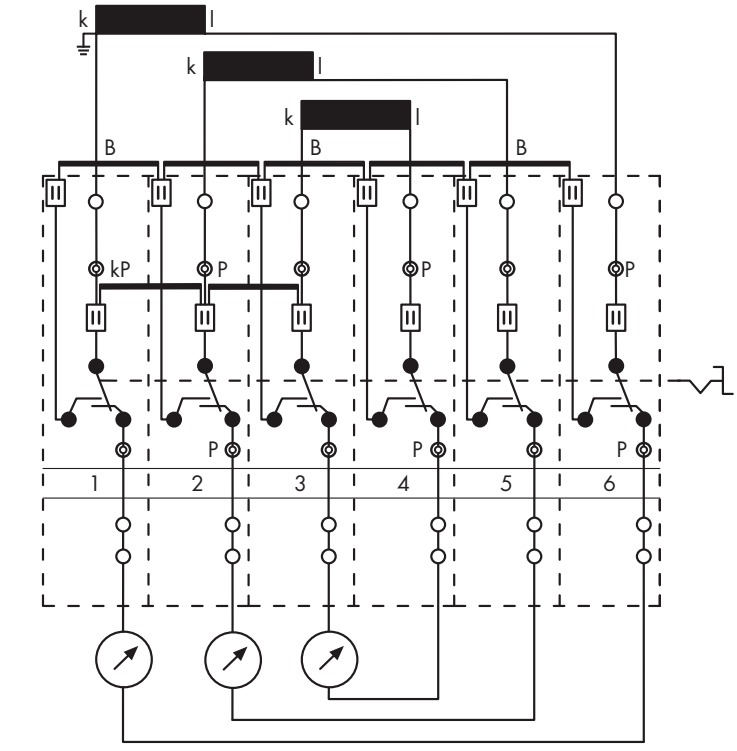

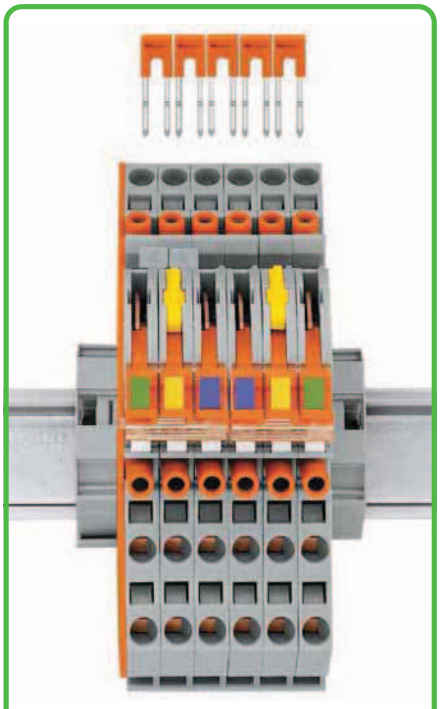

All 6 disconnect links are interlocked by the interlocking link.

kP = 'Y' point jumpers

Terminal blocks required:

6 x disconnect/test terminal block	282-870
5 x jumper, orange	282-424
2 x jumper, gray	282-402
1 x end plate, orange	282-386

in addition locking links, locking covers, lock-outs

Disconnect Terminal Blocks for Test and Measurement, 6 mm²/30 A, Through Terminal Blocks for Current and Voltage Transformer Circuits 282 Series

0.2 - 6 mm²	AWG 24 - 10	
500 V/6 kV/3 ❶	600 V, 30 A	
I_N 30 A	300 V, 5 A	
Terminal block width 8 mm / 0.315 in		
12 - 13 mm / 0.49 in ❷		

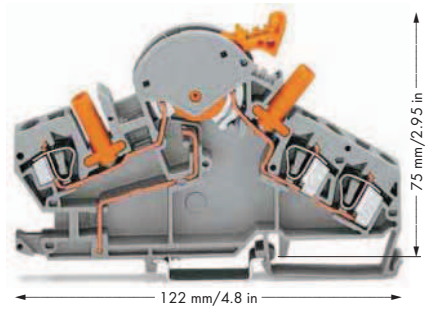

0.2 - 6 mm²	AWG 24 - 10	
500 V/6 kV/3 ❶	600 V, 30 A	
I_N 30 A	300 V, 5 A	
Terminal block width 8 mm / 0.315 in		
12 - 13 mm / 0.49 in ❷		

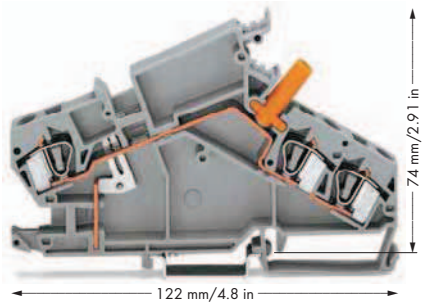

0.2 - 6 mm²	AWG 24 - 10	
500 V/6 kV/3 ❶	600 V, 30 A	
I_N 30 A	300 V, 5 A	
Terminal block width 8 mm / 0.315 in		
12 - 13 mm / 0.49 in ❷		

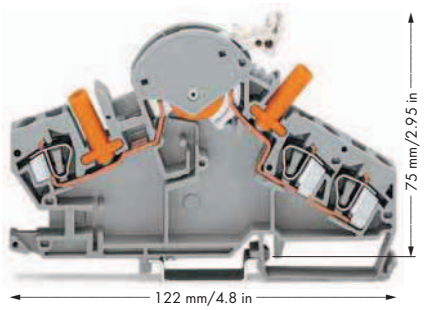

	Item No.	Pack. Unit
Disconnect terminal block for test and measurement, e.g., current transformer circuits, with touch-proof test sockets, orange disconnect link		
gray	**282-870** ❸ ❹	20

Item-Specific Accessories

End and separator plate, 1.5 mm thick, without use of lock-out seal			
	orange	**282-386**	50 (5x10)
	gray	**282-391**	50 (5x10)
End and separator plate, 1.5 mm thick, for use of lock-out seal			
	orange	**282-387**	50 (5x10)
	gray	**282-392**	50 (5x10)
Lock-out, for disconnect link			
	yellow	**282-384**	100 (5x20)
Locking cover, transparent, mechanically locks multiple links			
	1-pole	**282-881**	50 (5x10)
	2-pole	**282-882**	50 (5x10)
	3-pole	**282-883**	50 (5x10)
	4-pole	**282-884**	50 (5x10)
	5-pole	**282-885**	50 (5x10)
	6-pole	**282-886**	50 (5x10)
	7-pole	**282-887**	50 (5x10)
	8-pole	**282-888**	50 (5x10)
Interlocking link, mechanically locks multiple links, 1 m/3'3" long			
	transparent	**210-254**	1
Adjacent jumper, insulated, I_N 41 A			
	orange	**282-424**	100 (4x25)
WMB Multi marking system, 10 strips with 10 markers per card, for terminal widths 5 - 17.5 mm, yellow			
	k/l (50x)	**794-5553/000-002**	5

	Item No.	Pack. Unit
Through terminal block, e.g., current transformer circuits, with touch-proof test socket		
gray	**282-865** ❹	20

Item-Specific Accessories

End and separator plate, 1.5 mm thick			
	orange	**282-385**	50 (5x10)
	gray	**282-390**	50 (5x10)
WMB Multi marking system, 10 strips with 10 markers per card, for terminal widths 5 - 17.5 mm, yellow			
	k/l (50x)	**794-5553/000-002**	5

	Item No.	Pack. Unit
Disconnect terminal block for test and measurement, e.g., voltage transformer circuits, with touch-proof test sockets, light gray disconnect link		
gray	**282-860** ❸ ❹	20

Item-Specific Accessories

End and separator plate, 1.5 mm thick, without use of lock-out seal			
	orange	**282-386**	50 (5x10)
	gray	**282-391**	50 (5x10)
End and separator plate, 1.5 mm thick, for use of lock-out seal			
	orange	**282-387**	50 (5x10)
	gray	**282-392**	50 (5x10)
Lock-out, for disconnect link			
	yellow	**282-384**	100 (5x20)
Locking cover, transparent, mechanically locks multiple links			
	1-pole	**282-881**	50 (5x10)
	2-pole	**282-882**	50 (5x10)
	3-pole	**282-883**	50 (5x10)
	4-pole	**282-884**	50 (5x10)
	5-pole	**282-885**	50 (5x10)
	6-pole	**282-886**	50 (5x10)
	7-pole	**282-887**	50 (5x10)
	8-pole	**282-888**	50 (5x10)
Interlocking link, mechanically locks multiple links, 1 m/3'3" long			
	transparent	**210-254**	1
WMB Multi marking system, 10 strips with 10 markers per card, for terminal widths 5 - 17.5 mm, blue			
	U/V (50x)	**794-5554/000-006**	5

For list of approvals and user guide, see pages 634 to 637.