SYSTEM **NV/NH**

SERIES	TYPES	RATED VOLTAGE
UQU-N	**M**	**~690V**

Technical data:			Application:
Standards: **DIN 43620** **VDE 0636-201**	Breaking capacity: **~50kA/ ⎓ 25kA** Rated voltage: **~690V/ ⎓ 440V**	Characteristic: **gR/aR**	Fuse-links type M are applied in fuse base (for example) PK.

M00UQ U-N/6A/690V



Size	In.(A)	Type.(visual.indicator.with.grip.for. microswitch.NVS.5)	Code.No.	Operating I^2t-value.(A^2s)	Power dissipation (W)	Char.	Packaging. (pcs)	Weight.(g)
00C	6	M00CUQU-N/6A/690V	004331018	19	2.8	gR	3/120	180
	10	M00CUQU-N/10A/690V	004331019	62	3.3	gR	3/120	180
	16	M00CUQU-N/16A/690V	004331020	154	4.1	gR	3/120	180
	20	M00CUQU-N/20A/690V	004331021	290	5	gR	3/120	180
	25	M00CUQU-N/25A/690V	004331022	590	5.8	gR	3/120	180
	35	M00CUQU-N/35A/690V	004331023	1.160	8	gR	3/120	180
	40	M00CUQU-N/40A/690V	004331024	1.500	11	gR	3/120	180
	50	M00CUQU-N/50A/690V	004331025	2.370	16	gR	3/120	180
	63	M00CUQU-N/63A/690V	004331026	4.650	20	gR	3/120	180
	80	M00CUQU-N/80A/690V	004331027	5.350	25	gR	3/120	180
	100	M00CUQU-N/100A/690V	004331028	10.500	32	gR	3/120	180
	125	M00CUQU-N/125A/690V	004331029	21.300	40	gR	3/120	180
00	6	M00UQU-N/6A/690V	004331201	18	2.8	gR	3/90	180
	10	M00UQU-N/10A/690V	004331202	60	3.3	gR	3/90	180
	16	M00UQU-N/16A/690V	004331203	170	4.1	gR	3/90	180
	20	M00UQU-N/20A/690V	004331204	250	5	gR	3/90	180
	25	M00UQU-N/25A/690V	004331205	460	5.8	gR	3/90	180
	35	M00UQU-N/35A/690V	004331214	1.000	8	gR	3/90	180
	40	M00UQU-N/40A/690V	004331208	1.300	11	gR	3/90	180
	50	M00UQU-N/50A/690V	004331209	1.500	16	gR	3/90	180
	63	M00UQU-N/63A/690V	004331210	3.000	20	gR	3/90	180
	80	M00UQU-N/80A/690V	004331211	5.300	25	gR	3/90	180
	100	M00UQU-N/100A/690V	004331212	9.000	32	gR	3/90	180
	125	M00UQU-N/125A/690V	004331213	16.000	40	gR	3/90	180
	160	M00UQU-N/160A/690V	004331215	24.000	44	aR	3/90	180
0	6	M0UQU-N/6A/690V	004332201	18	2.8	gR	3/45	320
	10	M0UQU-N/10A/690V	004332202	60	3.3	gR	3/45	320
	16	M0UQU-N/16A/690V	004332203	170	4.1	gR	3/45	320
	20	M0UQU-N/20A/690V	004332204	250	5	gR	3/45	320
	25	M0UQU-N/25A/690V	004332205	460	5.8	gR	3/45	320
	35	M0UQU-N/35A/690V	004332216	1.000	8	gR	3/45	320
	40	M0UQU-N/40A/690V	004332208	1.300	11	gR	3/45	320
	50	M0UQU-N/50A/690V	004332209	1.500	16	gR	3/45	320
	63	M0UQU-N/63A/690V	004332210	3.000	20	gR	3/45	320
	80	M0UQU-N/80A/690V	004332211	5.300	25	gR	3/45	320
	100	M0UQU-N/100A/690V	004332212	9.000	32	gR	3/45	320
	125	M0UQU-N/125A/690V	004332213	16.000	40	gR	3/45	320
	160	M0UQU-N/160A/690V	004332214	24.000	44	aR	3/45	320

Dimensions:

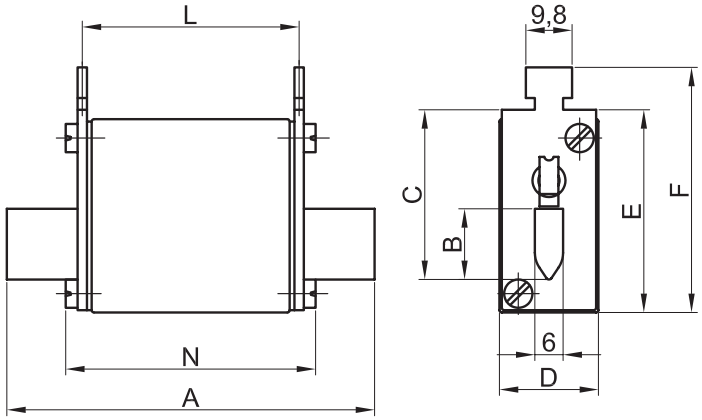

Size	A	B	C	D	E	F	L	N
00C	80	15	35	21	40	50.5	47	54
00	80	15	35	28	40	50.5	47	54
0	125	15	35	28	47	56.5	66	66

SERIES	TYPES	RATED VOLTAGE
UQU-N	**M**	**~690V**

Technical data:			Application:
Standards: **DIN 43620** **VDE 0636-201**	Breaking capacity: **~50kA/ ⎓ 25kA** Rated voltage: **~690V/ ⎓ 440V**	Characteristic: **gR/aR**	Fuse-links type M are applied in fuse base (for example) PK.

Size	In (A)	Type (visual indicator with grip for microswitch NVS 5)	Code No.	Operating I^2t-value (A^2s)	Power dissipation (W)	Char.	Packaging (pcs)	Weight (g)
1	35	M1UQU-N/35A/690V	004333217	1.000	8	gR	3/24	450
	50	M1UQU-N/50A/690V	004333208	1.500	16	gR	3/24	450
	63	M1UQU-N/63A/690V	004333209	3.000	20	gR	3/24	450
	80	M1UQU-N/80A/690V	004333210	5.300	25	gR	3/24	450
	100	M1UQU-N/100A/690V	004333211	9.000	32	gR	3/24	450
	125	M1UQU-N/125A/690V	004333212	16.000	40	gR	3/24	450
	160	M1UQU-N/160A/690V	004333213	24.000	44	aR	3/24	450
	200	M1UQU-N/200A/690V	004333214	40.000	58	aR	3/24	450
	224	M1UQU-N/224A/690V	004333215	52.000	60	aR	3/24	450
	250	M1UQU-N/250A/690V	004333216	65.000	63	aR	3/24	450
2	80	M2UQU-N/80A/690V	004334209	5.300	25	gR	3/15	680
	100	M2UQU-N/100A/690V	004334210	9.000	32	gR	3/15	680
	125	M2UQU-N/125A/690V	004334211	16.000	40	gR	3/15	680
	160	M2UQU-N/160A/690V	004334213	24.000	44	aR	3/15	680
	200	M2UQU-N/200A/690V	004334214	40.000	58	aR	3/15	680
	250	M2UQU-N/250A/690V	004334216	60.000	63	aR	3/15	680
	280	M2UQU-N/280A/690V	004334218	100.000	75	aR	3/15	680
	300	M2UQU-N/300A/690V	004334219	140.000	85	aR	3/15	680
	315	M2UQU-N/315A/690V	004334220	175.000	95	aR	3/15	680
	355	M2UQU-N/355A/690V	004334221	220.000	100	aR	3/15	680
	400	M2UQU-N/400A/690V	004334222	270.000	105	aR	3/15	680
3	250	M3UQU-N/250A/690V	004335207	60.000	63	aR	3/12	880
	280	M3UQU-N/280A/690V	004335208	100.000	75	aR	3/12	880
	315	M3UQU-N/315A/690V	004335209	175.000	95	aR	3/12	880
	355	M3UQU-N/355A/690V	004335210	300.000	100	aR	3/12	880
	400	M3UQU-N/400A/690V	004335211	441.700	105	aR	3/12	880
	450	M3UQU-N/450A/690V	004335213	530.000	115	aR	3/12	880
	500	M3UQU-N/500A/690V	004335214	620.000	130	aR	3/12	880
	560	M3UQU-N/560A/690V	004335215	730.000	135	aR	3/12	880
	630	M3UQU-N/630A/690V	004335216	850.000	140	aR	3/12	880

M2UQU-N/80A/690V



Dimensions:

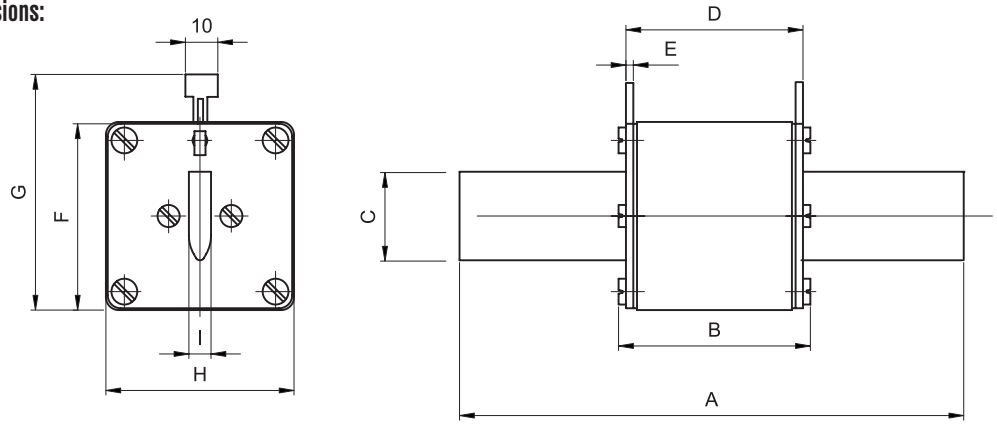

Size	A	B	C	D	E	F	G	H	I
1	135	75	20	68	2	40	61.5	46	6
2	150	75	26	68	2	48	71.5	57	6
3	150	75	36	68	2	60	81.5	69	6

SYSTEM **NV/NH**

SERIES	TYPES	RATED VOLTAGE
UQU	**S80mm/97mm**	**~690V**

Technical data:			Application:
Standards: **DIN 43653** **IEC 60269-4-1**	Breaking capacity: **~50kA/ ⎓ 25kA** Rated voltage: **~690V/ ⎓ 440V**	Characteristic: **gR/aR**	Fuse-links type S of size 00C, 00 and 0 are applied in fuse base US00-1/80 and mounted by screws to busbars.

S00UQU/80/6A/690V



Size	In (A)	Type (visual indicator with grip for microswitch NVS 5)	Code No.	Operating I^2t-value (A^2s)	Power dissipation (W)	Char.	Packaging (pcs)	Weight (g)
00C	6	S00CUQU/80/6A/690V	004331003	19	2.8	aR	3/120	180
	10	S00CUQU/80/10A/690V	004331004	62	3.3	aR	3/120	180
	16	S00CUQU/80/16A/690V	004331005	154	4.1	aR	3/120	180
	20	S00CUQU/80/20A/690V	004331006	290	5	aR	3/120	180
	25	S00CUQU/80/25A/690V	004331007	590	5.8	aR	3/120	180
	35	S00CUQU/80/35A/690V	004331008	1.160	8	aR	3/120	180
	40	S00CUQU/80/40A/690V	004331009	1.500	11	aR	3/120	180
	50	S00CUQU/80/50A/690V	004331010	2.370	16	aR	3/120	180
	63	S00CUQU/80/63A/690V	004331011	4.650	20	aR	3/120	180
	80	S00CUQU/80/80A/690V	004331012	5.350	25	aR	3/120	180
	100	S00CUQU/80/100A/690V	004331013	10.500	32	aR	3/120	180
	125	S00CUQU/80/125A/690V	004331014	21.300	40	aR	3/120	180
00	6	S00UQU/80/6A/690V	004331102	18	2.8	gR	3/90	180
	10	S00UQU/80/10A/690V	004331103	60	3.3	gR	3/90	180
	16	S00UQU/80/16A/690V	004331104	170	4.1	gR	3/90	180
	20	S00UQU/80/20A/690V	004331105	250	5	gR	3/90	180
	25	S00UQU/80/25A/690V	004331106	460	5.8	gR	3/90	180
	35	S00UQU/80/35A/690V	004331116	1.000	8	gR	3/90	180
	40	S00UQU/80/40A/690V	004331110	1.300	11	gR	3/90	180
	50	S00UQU/80/50A/690V	004331111	1.500	16	gR	3/90	180
	63	S00UQU/80/63A/690V	004331112	3.000	20	gR	3/90	180
	80	S00UQU/80/80A/690V	004331113	5.300	25	gR	3/90	180
	100	S00UQU/80/100A/690V	004331114	9.000	32	gR	3/90	180
	125	S00UQU/80/125A/690V	004331115	16.000	40	gR	3/90	180
	160	S00UQU/80/160A/690V	004331117	24.000	44	aR	3/90	180
0	6	S0UQU/97/6A/690V	004332101	18	2.8	gR	3/45	320
	10	S0UQU/97/10A/690V	004332102	60	3.3	gR	3/45	320
	16	S0UQU/97/16A/690V	004332103	170	4.1	gR	3/45	320
	20	S0UQU/97/20A/690V	004332104	250	5	gR	3/45	320
	25	S0UQU/97/25A/690V	004332105	460	5.8	gR	3/45	320
	35	S0UQU/97/35A/690V	004332116	1.000	8	gR	3/45	320
	40	S0UQU/97/40A/690V	004332108	1.300	11	gR	3/45	320
	50	S0UQU/97/50A/690V	004332109	1.500	16	gR	3/45	320
	63	S0UQU/97/63A/690V	004332110	3.000	20	gR	3/45	320
	80	S0UQU/97/80A/690V	004332111	5.300	25	gR	3/45	320
	100	S0UQU/97/100A/690V	004332112	9.000	32	gR	3/45	320
	125	S0UQU/97/125A/690V	004332113	16.000	40	gR	3/45	320
	160	S0UQU/97/160A/690V	004332114	24.000	44	aR	3/45	320

Dimensions:

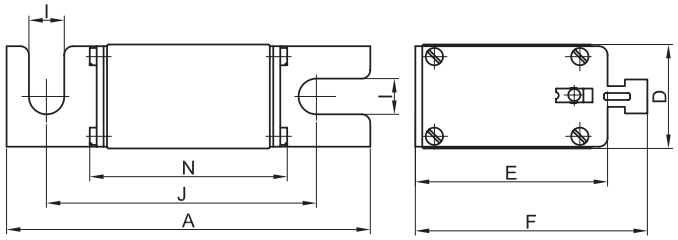

Size	A	D	E	F	I	J	N
00C	105	21	48	58	11.5	80	54
00	105	27	48	58	11.5	80	54
0	121	27	48	58	11.5	97	69

SERIES	TYPES	RATED VOLTAGE
UQU	**S110mm**	**~690V**

Technical data:			Application:
Standards: **DIN 43653** **IEC 60269-4-1**	Breaking capacity: **~50kA/ ⎓ 25kA** Rated voltage: **~690V/ ⎓ 440V**	Characteristic: **gR/aR**	Fuse-links type S 110mm of size 1, 2, 3 are applied in universal fuse base US1..3-1/80-110 and mounted by screws to busbars.

Size	In (A)	Type (visual indicator with grip for microswitch NVS 5)	Code No.	Operating I^2t-value (A^2s)	Power dissipation (W)	Char.	Packaging (pcs)	Weight (g)
1	35	S1UQU/110/35A/690V	004333117	1.000	8	gR	3/24	450
	50	S1UQU/110/50A/690V	004333108	1.500	16	gR	3/24	450
	63	S1UQU/110/63A/690V	004333109	3.000	20	gR	3/24	450
	80	S1UQU/110/80A/690V	004333110	5.300	25	gR	3/24	450
	100	S1UQU/110/100A/690V	004333111	9.000	32	gR	3/24	450
	125	S1UQU/110/125A/690V	004333112	16.000	40	gR	3/24	450
	160	S1UQU/110/160A/690V	004333113	24.000	44	aR	3/24	450
	200	S1UQU/110/200A/690V	004333114	40.000	58	aR	3/24	450
	224	S1UQU/110/224A/690V	004333115	52.000	60	aR	3/24	450
	250	S1UQU/110/250A/690V	004333116	65.000	63	aR	3/24	450
2	80	S2UQU/110/80A/690V	004334109	5.300	25	gR	3/15	680
	100	S2UQU/110/100A/690V	004334110	9.000	32	gR	3/15	680
	125	S2UQU/110/150A/690V	004334111	16.000	40	gR	3/15	680
	160	S2UQU/110/160A/690V	004334112	24.000	44	aR	3/15	680
	200	S2UQU/110/200A/690V	004334113	40.000	58	aR	3/15	680
	250	S2UQU/110/250A/690V	004334115	60.000	63	aR	3/15	680
	280	S2UQU/110/280A/690V	004334116	100.000	75	aR	3/15	680
	300	S2UQU/110/300A/690V	004334121	140.000	85	aR	3/15	680
	315	S2UQU/110/315A/690V	004334117	175.000	95	aR	3/15	680
	355	S2UQU/110/355A/690V	004334118	220.000	100	aR	3/15	680
	400	S2UQU/110/400A/690V	004334119	270.000	105	aR	3/15	680
3	250	S3UQU/110/250A/690V	004335117	60.000	63	aR	3/12	880
	280	S3UQU/110/280A/690V	004335108	100.000	75	aR	3/12	880
	315	S3UQU/110/315A/690V	004335109	175.000	95	aR	3/12	880
	355	S3UQU/110/355A/690V	004335110	300.000	100	aR	3/12	880
	400	S3UQU/110/400A/690V	004335111	441.700	105	aR	3/12	880
	450	S3UQU/110/450A/690V	004335113	530.000	115	aR	3/12	880
	500	S3UQU/110/500A/690V	004335114	620.000	130	aR	3/12	880
	560	S3UQU/110/560A/690V	004335115	730.000	135	aR	3/12	880
	630	S3UQU/110/630A/690V	004335116	850.000	140	aR	3/12	880

S2UQU/110/80A/690V



Dimensions:

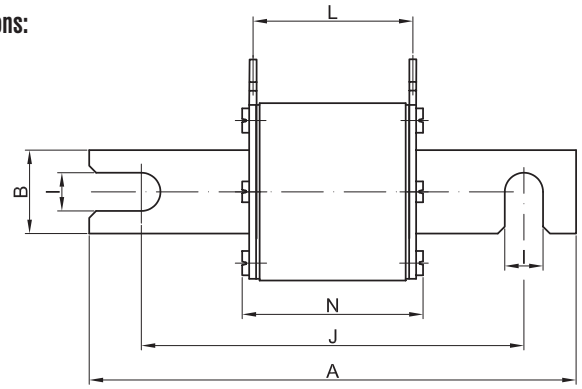

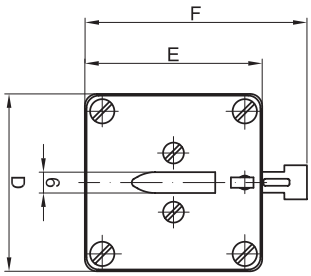

Rozmiar	A	B	D	E	F	I	J	L	N
1	140	26	46	46	57.5	11.5	110	66	75
2	140	26	57	57	71.5	11.5	110	66	75
3	140	36	69	69	81.5	11.5	110	66	75

SERIES	TYPES	RATED VOLTAGE
UQ1	**M**	**~690V**

Technical data:			Application:
Standards: **DIN 43620** **VDE 0636-201**	Breaking capacity: **~200kA** Rated voltage: **~690V**	Characteristic: **aR**	Fuse-links type M are applied in fuse base (for example) PK.

M00CUQ1/50A/690V



Size	In (A)	Type (visual indicator with grip for microswitch NVS 5)	Code No.	Operating I^2t-value (A^2s)	Power dissipation (W)	Char.	Packaging (pcs)	Weight (g)
00C	10	M00CUQ1/10A/690V	004341204	80	5.5	aR	3/60	150
	16	M00CUQ1/16A/690V	004341205	140	6	aR	3/60	150
	20	M00CUQ1/20A/690V	004341206	230	7	aR	3/60	150
	25	M00CUQ1/25A/690V	004341207	400	8	aR	3/60	150
	32	M00CUQ1/32A/690V	004341208	650	9	aR	3/60	150
	35	M00CUQ1/35A/690V	004341209	835	10	aR	3/60	150
	40	M00CUQ1/40A/690V	004341210	1.030	11	aR	3/60	150
	50	M00CUQ1/50A/690V	004341211	1.820	12	aR	3/60	150
	63	M00CUQ1/63A/690V	004341212	2.680	14.2	aR	3/60	150
	80	M00CUQ1/80A/690V	004341213	5.550	20.2	aR	3/60	150
	100	M00CUQ1/100A/690V	004341214	8.350	23.4	aR	3/60	150
	125	M00CUQ1/125A/690V	004341215	11.800	28	aR	3/60	150
	160	M00CUQ1/160A/690V	004341216	19.300	35	aR	3/60	150

Dimensions:

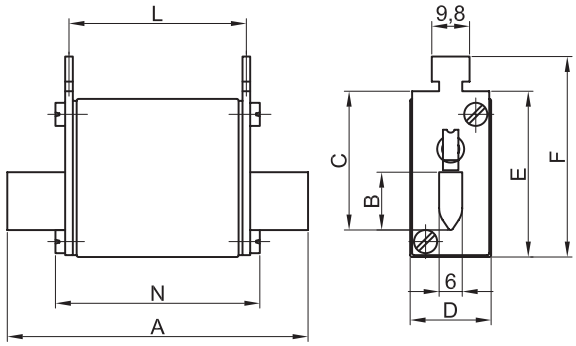

Size	A	B	C	D	E	F	L	N
00C	78	15	35	21	42	52	46	53

SERIES	TYPES	RATED VOLTAGE
UQ1	**M**	**~690V**

Technical data:			Application:
Standards: **DIN 43620** **VDE 0636-201**	Breaking capacity: **~200kA** Rated voltage: **~690V**	Characteristic: **aR**	Fuse-links type M are applied in fuse base (for example PK).

Size	In (A)	Type (visual indicator with grip for microswitch NVS 5)	Code No.	Operating I^2t-value (A^2s)	Power dissipation (W)	Char.	Packaging (pcs)	Weight (g)
1	32	M1UQ1/32A/690V	004343208	650	7.3	aR	3	500
	40	M1UQ1/40A/690V	004343210	1.030	8.4	aR	3	500
	50	M1UQ1/50A/690V	004343211	1.820	10.6	aR	3	500
	63	M1UQ1/63A/690V	004343212	2.680	13	aR	3	500
	80	M1UQ1/80A/690V	004343213	5.550	15.2	aR	3	500
	100	M1UQ1/100A/690V	004343214	8.350	19.3	aR	3	500
	125	M1UQ1/125A/690V	004343215	11.800	22.3	aR	3	500
	160	M1UQ1/160A/690V	004343216	19.300	27.8	aR	3	500
	200	M1UQ1/200A/690V	004343217	27.800	36	aR	3	500
	250	M1UQ1/250A/690V	004343219	45.000	41.4	aR	3	500
2	160	M2UQ1/160A/690V	004344216	19.300	26.7	aR	3	650
	200	M2UQ1/200A/690V	004344217	27.800	31.3	aR	3	650
	250	M2UQ1/250A/690V	004344219	45.000	39.8	aR	3	650
	315	M2UQ1/315A/690V	004344221	85.600	42.8	aR	3	650
	400	M2UQ1/400A/690V	004344223	160.000	80.2	aR	3	650
3	315	M3UQ1/315A/690V	004345221	85.600	39.8	aR	3	850
	400	M3UQ1/400A/690V	004345223	160.000	50.6	aR	3	850
	500	M3UQ1/500A/690V	004345226	257.000	61.8	aR	3	850
	630	M3UQ1/630A/690V	004345228	407.000	78.6	aR	3	850

M2UQ1/400A/690V



Dimensions:

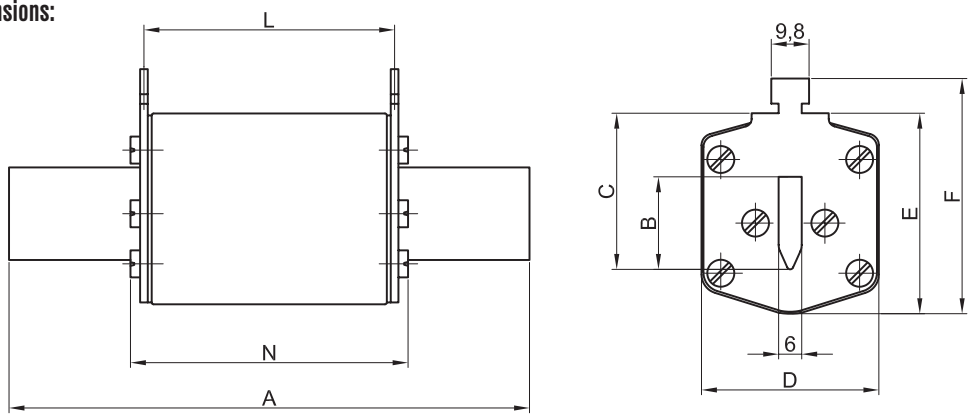

Size	A	B	C	D	E	F	L	N
1	135	24	40	46	52	62	65	72
2	150	30	48	54	61	71	65	72
3	150	37	60	64	74	84	65	72

SYSTEM **NV/NH**

SERIES	TYPES	RATED VOLTAGE
UQ1	**S80mm**	**~690V**

Technical data:			Application:
Standards: **DIN 43653** **IEC 60269-4-1**	Breaking capacity: **~200kA** Rated voltage: **~690V**	Characteristic: **aR**	Fuse-links type S of size 00C and 00 are applied in fuse base US00-1/80 and mounted by screws to busbars.

S00CUQ1/80/50A/690V



Size	In (A)	Type with visual indicator	Code No.	Operating I^2t-value (A^2s)	Power dissipation (W)	Char.	Packaging (pcs)	Weight (g)
00C	10	S00CUQ1/80/10A/690V	004341104	80	5.5	aR	3	150
	16	S00CUQ1/80/16A/690V	004341105	140	6	aR	3	150
	20	S00CUQ1/80/20A/690V	004341106	230	7	aR	3	150
	25	S00CUQ1/80/25A/690V	004341107	400	8	aR	3	150
	32	S00CUQ1/80/32A/690V	004341108	650	9	aR	3	150
	35	S00CUQ1/80/35A/690V	004341109	835	10	aR	3	150
	40	S00CUQ1/80/40A/690V	004341110	1.030	11	aR	3	150
	50	S00CUQ1/80/50A/690V	004341111	1.820	12	aR	3	150
	63	S00CUQ1/80/63A/690V	004341112	2.680	14.2	aR	3	150
	80	S00CUQ1/80/80A/690V	004341113	5.550	20.2	aR	3	150
	100	S00CUQ1/80/100A/690V	004341114	8.350	23.4	aR	3	150
	125	S00CUQ1/80/125A/690V	004341115	11.800	28	aR	3	150
	160	S00CUQ1/80/160A/690V	004341116	19.300	35	aR	3	150
00	200	S00UQ1/80/200A/690V	004341117	27.800	40	aR	3	150
	250	S00UQ1/80/250A/690V	004341119	45.000	49.7	aR	3	150
	315	S00UQ1/80/315A/690V	004341121	85.600	59.1	aR	3	150
	350	S00UQ1/80/350A/690V	004341122	118.000	65.4	aR	3	150
	400*	S00UQ1/80/400A/500V	004341123	160.000	80	aR	3	150

* 500V

Dimensions:

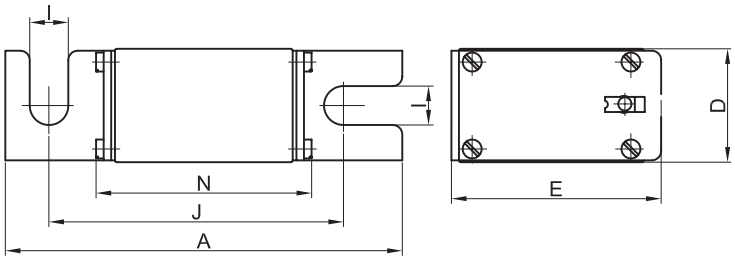

Size	A	D	E	I	J	N
00C	101	21	40	8.5	78	54
00	105	30	51	10.3	78	56

SERIES	TYPES	RATED VOLTAGE
UQ1	**S80mm**	**~690V**

Technical data:			Application:
Standards: **DIN 43653** **IEC 60269-4-1**	Breaking capacity: **~200kA** Rated voltage: **~690V**	Characteristic: **aR**	Fuse-links type S 80mm of size 1, 2, 3 are applied in universal fuse base US1..3-1/80-110 and mounted by screws to busbars.

Size	In (A)	Type with visual indicator	Code No.	Operating I^2t-value (A^2s)	Power dissipation (W)	Type with centre trip indicator for microswitch MK	Code No.	Char.	Pack. (pcs)	Weight (g)
1	32	S1UQ1/80/32A/690V	004343108	650	7.3	S1MUQ1/80/32A/690V	004343708	aR	1	500
	35	S1UQ1/80/35A/690V	004343109	835	7.7	S1MUQ1/80/35A/690V	004343709	aR	1	500
	40	S1UQ1/80/40A/690V	004343110	1.030	8.4	S1MUQ1/80/40A/690V	004343710	aR	1	500
	50	S1UQ1/80/50A/690V	004343111	1.820	10.6	S1MUQ1/80/50A/690V	004343711	aR	1	500
	63	S1UQ1/80/63A/690V	004343112	2.680	13	S1MUQ1/80/63A/690V	004343712	aR	1	500
	80	S1UQ1/80/80A/690V	004343113	5.550	15.2	S1MUQ1/80/80A/690V	004343713	aR	1	500
	100	S1UQ1/80/100A/690V	004343114	8.350	19.3	S1MUQ1/80/100A/690V	004343714	aR	1	500
	125	S1UQ1/80/125A/690V	004343115	11.800	22.3	S1MUQ1/80/125A/690V	004343715	aR	1	500
	160	S1UQ1/80/160A/690V	004343116	19.300	27.8	S1MUQ1/80/160A/690V	004343716	aR	1	500
	200	S1UQ1/80/200A/690V	004343117	27.800	36	S1MUQ1/80/200A/690V	004343717	aR	1	500
	250	S1UQ1/80/250A/690V	004343119	45.000	41.4	S1MUQ1/80/250A/690V	004343719	aR	1	500
	315	S1UQ1/80/315A/690V	004343121	85.600	45.6	S1MUQ1/80/315A/690V	004343721	aR	1	500
	350	S1UQ1/80/350A/690V	004343122	118.000	48.4	S1MUQ1/80/350A/690V	004343722	aR	1	500
	400	S1UQ1/80/400A/690V	004343123	160.000	53.7	S1MUQ1/80/400A/690V	004343723	aR	1	500
2	160	S2UQ1/80/160A/690V	004344116	19.300	26.7	S2MUQ1/80/160A/690V	004344716	aR	1	650
	200	S2UQ1/80/200A/690V	004344117	27.800	31.3	S2MUQ1/80/200A/690V	004344717	aR	1	650
	250	S2UQ1/80/250A/690V	004344119	45.000	39.8	S2MUQ1/80/250A/690V	004344719	aR	1	650
	315	S2UQ1/80/315A/690V	004344121	85.600	42.8	S2MUQ1/80/315A/690V	004344721	aR	1	650
	350	S2UQ1/80/350A/690V	004344122	118.000	47.5	S2MUQ1/80/350A/690V	004344722	aR	1	650
	400	S2UQ1/80/400A/690V	004344123	160.000	52	S2MUQ1/80/400A/690V	004344723	aR	1	650
	450	S2UQ1/80/450A/690V	004344125	200.000	59.6	S2MUQ1/80/450A/690V	004344725	aR	1	650
	500	S2UQ1/80/500A/690V	004344126	257.000	66.5	S2MUQ1/80/500A/690V	004344726	aR	1	650
	630	S2UQ1/80/630A/690V	004344128	407.000	83.5	S2MUQ1/80/630A/690V	004344728	aR	1	650
3	315	S3UQ1/80/315A/690V	004345121	85.600	39.8	S3MUQ1/80/315A/690V	004345721	aR	1	850
	350	S3UQ1/80/350A/690V	004345122	118.000	44.9	S3MUQ1/80/350A/690V	004345722	aR	1	850
	400	S3UQ1/80/400A/690V	004345123	160.000	50.6	S3MUQ1/80/400A/690V	004345723	aR	1	850
	450	S3UQ1/80/450A/690V	004345125	200.000	57.5	S3MUQ1/80/450A/690V	004345725	aR	1	850
	500	S3UQ1/80/500A/690V	004345126	257.000	61.8	S3MUQ1/80/500A/690V	004345726	aR	1	850
	630	S3UQ1/80/630A/690V	004345128	407.000	78.6	S3MUQ1/80/630A/690V	004345728	aR	1	850
	710	S3UQ1/80/710A/690V	004345129	653.000	91.6	S3MUQ1/80/710A/690V	004345729	aR	1	850
	800	S3UQ1/80/800A/690V	004345130	835.000	104	S3MUQ1/80/800A/690V	004345730	aR	1	850
	1000	S3UQ1/80/1000A/690V	004345132	1.060.000	127	S3MUQ1/80/1000A/690V	004345732	aR	1	850
	1250*	S3UQ1/80/1250A/500V	004345133	1.500.000	165.3	S3MUQ1/80/1250A/500V	004345733	aR	1	850

* 500V

S1UQ1/80/100A/690V



S1MUQ1/80/100A/690V



Dimensions:

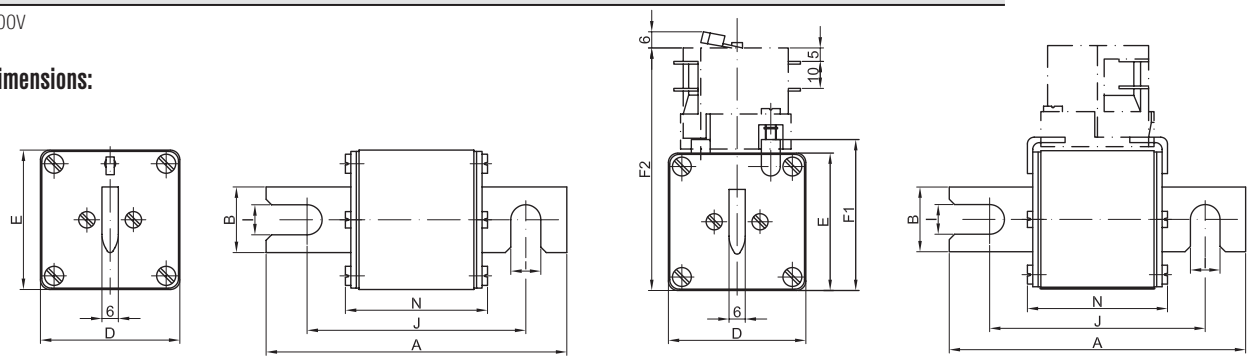

Size	A	B	D	E	F1	F2	I	J	N
1	110	24	51	51	56	90	11	80	52
2	110	30	60	60	65	99	11	80	52
3	110	37	75	75	80	114	11	80	52

SERIES	TYPES	RATED VOLTAGE
UQ1	**S110mm**	**~690V**

Technical data:			Application:
Standards: **DIN 43653** **IEC 60269-4-1**	Breaking capacity: **~200kA** Rated voltage: **~690V**	Characteristic: **aR**	Fuse-links type S 110mm of size 1, 2, 3 are applied in universal fuse base US1..3-1/80-110 and mounted by screws to busbars.

S2UQ1/110/630A/690V



S1MUQ1/110/100A/690V



Size	In (A)	Type with visual indicator	Code No.	Operating I^2t-value (A^2s)	Power dissipation (W)	Type with centre trip indicator for microswitch MK	Code No.	Char.	Pack. (pcs)	Weight (g)
1	32	S1UQ1/110/32A/690V	004353108	650	7.3	S1MUQ1/110/32A/690V	004353708	aR	1	500
	35	S1UQ1/110/35A/690V	004353109	835	7.7	S1MUQ1/110/35A/690V	004353709	aR	1	500
	40	S1UQ1/110/40A/690V	004353110	1.030	8.4	S1MUQ1/110/40A/690V	004353710	aR	1	500
	50	S1UQ1/110/50A/690V	004353111	1.820	10.6	S1MUQ1/110/50A/690V	004353711	aR	1	500
	63	S1UQ1/110/63A/690V	004353112	2.680	13	S1MUQ1/110/63A/690V	004353712	aR	1	500
	80	S1UQ1/110/80A/690V	004353113	5.550	15.2	S1MUQ1/110/80A/690V	004353713	aR	1	500
	100	S1UQ1/110/100A/690V	004353114	8.350	19.3	S1MUQ1/110/100A/690V	004353714	aR	1	500
	125	S1UQ1/110/125A/690V	004353115	11.800	22.3	S1MUQ1/110/125A/690V	004353715	aR	1	500
	160	S1UQ1/110/160A/690V	004353116	19.300	27.8	S1MUQ1/110/160A/690V	004353716	aR	1	500
	200	S1UQ1/110/200A/690V	004353117	27.800	36	S1MUQ1/110/200A/690V	004353717	aR	1	500
	250	S1UQ1/110/250A/690V	004353119	45.000	41.4	S1MUQ1/110/250A/690V	004353719	aR	1	500
	315	S1UQ1/110/315A/690V	004353121	85.600	45.6	S1MUQ1/110/315A/690V	004353721	aR	1	500
	350	S1UQ1/110/350A/690V	004353122	118.000	48.4	S1MUQ1/110/350A/690V	004353722	aR	1	500
	400	S1UQ1/110/400A/690V	004353123	160.000	53.7	S1MUQ1/110/400A/690V	004353723	aR	1	500
2	160	S2UQ1/110/160A/690V	004354116	19.300	26.7	S2MUQ1/110/160A/690V	004354716	aR	1	650
	200	S2UQ1/110/200A/690V	004354117	27.800	31.3	S2MUQ1/110/200A/690V	004354717	aR	1	650
	250	S2UQ1/110/250A/690V	004354119	45.000	39.8	S2MUQ1/110/250A/690V	004354719	aR	1	650
	315	S2UQ1/110/315A/690V	004354121	85.600	42.8	S2MUQ1/110/315A/690V	004354721	aR	1	650
	350	S2UQ1/110/350A/690V	004354122	118.000	47.5	S2MUQ1/110/350A/690V	004354722	aR	1	650
	400	S2UQ1/110/400A/690V	004354123	160.000	52	S2MUQ1/110/400A/690V	004354723	aR	1	650
	450	S2UQ1/110/450A/690V	004354125	200.000	59.6	S2MUQ1/110/450A/690V	004354725	aR	1	650
	500	S2UQ1/110/500A/690V	004354126	257.000	66.5	S2MUQ1/110/500A/690V	004354726	aR	1	650
	630	S2UQ1/110/630A/690V	004354128	407.000	83.5	S2MUQ1/110/630A/690V	004354728	aR	1	650
3	315	S3UQ1/110/315A/690V	004355121	85.600	39.8	S3MUQ1/110/315A/690V	004355721	aR	3	850
	350	S3UQ1/110/350A/690V	004355122	118.000	44.9	S3MUQ1/110/350A/690V	004355722	aR	3	850
	400	S3UQ1/110/400A/690V	004355123	160.000	50.6	S3MUQ1/110/400A/690V	004355723	aR	3	850
	450	S3UQ1/110/450A/690V	004355125	200.000	57.5	S3MUQ1/110/450A/690V	004355725	aR	3	850
	500	S3UQ1/110/500A/690V	004355126	257.000	61.8	S3MUQ1/110/500A/690V	004355726	aR	3	850
	630	S3UQ1/110/630A/690V	004355128	407.000	78.6	S3MUQ1/110/630A/690V	004355728	aR	3	850
	710	S3UQ1/110/710A/690V	004355129	653.000	91.6	S3MUQ1/110/710A/690V	004355729	aR	3	850
	800	S3UQ1/110/800A/690V	004355130	835.000	104	S3MUQ1/110/800A/690V	004355730	aR	3	850
	1000	S3UQ1/110/1000A/690V	004355132	1.060.000	127	S3MUQ1/110/1000A/690V	004355732	aR	3	850
	1250*	S3UQ1/110/1250A/500V	004355133	1.500.000	165.6	S3MUQ1/110/1250A/500V	004355733	aR	3	850

* 500V

Dimensions:

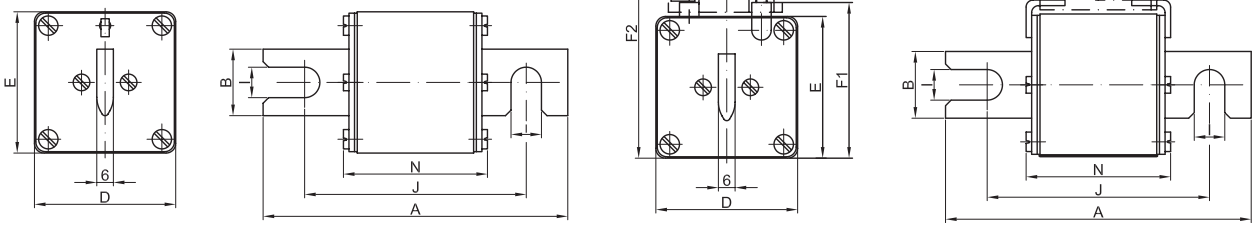

Size	A	B	D	E	F1	F2	I	J	N
1	140	24	51	51	56	90	11	110	52
2	140	30	60	60	65	99	11	110	52
3	140	37	75	75	80	114	11	110	52

SERIES	TYPES	RATED VOLTAGE
UQ1	**G**	**~690V**

Technical data:			Application:
Standards: **IEC 60269-4-1**	Breaking capacity: **~200kA** Rated voltage: **~690V**	Characteristic: **aR**	Fuse-links type G has threaded studs so fuses are mounted by special screws to busbars.

Size	In (A)	Type with visual indicator	Code No.	Operating I^2t-value (A^2s)	Power dissipation (W)	Type with centre trip indicator for microswitch MK	Code No.	Char.	Pack. (pcs)	Weight (g)
1	32	G1UQ1/32A/690V	004343508	650	7.3	G1MUQ1/32A/690V	004343608	aR	2	500
	35	G1UQ1/35A/690V	004343509	835	7.7	G1MUQ1/35A/690V	004343609	aR	2	500
	40	G1UQ1/40A/690V	004343510	1.030	8.4	G1MUQ1/40A/690V	004343610	aR	2	500
	50	G1UQ1/50A/690V	004343511	1.820	10.6	G1MUQ1/50A/690V	004343611	aR	2	500
	63	G1UQ1/63A/690V	004343512	2.680	13	G1MUQ1/63A/690V	004343612	aR	2	500
	80	G1UQ1/80A/690V	004343513	5.550	15.2	G1MUQ1/80A/690V	004343613	aR	2	500
	100	G1UQ1/100A/690V	004343514	8.350	19.3	G1MUQ1/100A/690V	004343614	aR	2	500
	125	G1UQ1/125A/690V	004343515	11.800	22.3	G1MUQ1/125A/690V	004343615	aR	2	500
	160	G1UQ1/160A/690V	004343516	19.300	27.8	G1MUQ1/160A/690V	004343616	aR	2	500
	200	G1UQ1/200A/690V	004343517	27.800	36	G1MUQ1/200A/690V	004343617	aR	2	500
	250	G1UQ1/250A/690V	004343519	45.000	41.4	G1MUQ1/250A/690V	004343619	aR	2	500
	315	G1UQ1/315A/690V	004343521	85.600	45.6	G1MUQ1/315A/690V	004343621	aR	2	500
	350	G1UQ1/350A/690V	004343522	118.000	48.4	G1MUQ1/350A/690V	004343622	aR	2	500
	400	G1UQ1/400A/690V	004343523	160.000	53.7	G1MUQ1/400A/690V	004343623	aR	2	500
2	160	G2UQ1/160A/690V	004344516	19.300	26.7	G2MUQ1/160A/690V	004344616	aR	2	650
	200	G2UQ1/200A/690V	004344517	27.800	31.3	G2MUQ1/200A/690V	004344617	aR	2	650
	250	G2UQ1/250A/690V	004344519	45.000	39.8	G2MUQ1/250A/690V	004344619	aR	2	650
	315	G2UQ1/315A/690V	004344521	85.600	42.8	G2MUQ1/315A/690V	004344621	aR	2	650
	350	G2UQ1/350A/690V	004344522	118.000	47.5	G2MUQ1/350A/690V	004344622	aR	2	650
	400	G2UQ1/400A/690V	004344523	160.000	52	G2MUQ1/400A/690V	004344623	aR	2	650
	450	G2UQ1/450A/690V	004344525	200.000	59.6	G2MUQ1/450A/690V	004344625	aR	2	650
	500	G2UQ1/500A/690V	004344526	257.000	66.5	G2MUQ1/500A/690V	004344626	aR	2	650
	630	G2UQ1/630A/690V	004344528	407.000	83.5	G2MUQ1/630A/690V	004344628	aR	2	650
3	315	G3UQ1/315A/690V	004345521	85.600	39.8	G3MUQ1/315A/690V	004345621	aR	2	850
	350	G3UQ1/350A/690V	004345522	118.000	44.9	G3MUQ1/350A/690V	004345622	aR	2	850
	400	G3UQ1/400A/690V	004345523	160.000	50.6	G3MUQ1/400A/690V	004345623	aR	2	850
	450	G3UQ1/450A/690V	004345525	200.000	57.5	G3MUQ1/450A/690V	004345625	aR	2	850
	500	G3UQ1/500A/690V	004345526	257.000	61.8	G3MUQ1/500A/690V	004345626	aR	2	850
	630	G3UQ1/630A/690V	004345528	407.000	78.6	G3MUQ1/630A/690V	004345628	aR	2	850
	710	G3UQ1/710A/690V	004345529	653.000	91.6	G3MUQ1/710A/690V	004345629	aR	2	850
	800	G3UQ1/800A/690V	004345530	835.000	104	G3MUQ1/800A/690V	004345630	aR	2	850
	1000	G3UQ1/1000A/690V	004345532	1.060.000	127	G3MUQ1/1000A/690V	004345632	aR	2	850
	1250*	G3UQ1/1250A/500V	004345533	1.500.000	165.6	G3MUQ1/1250A/500V	004345633	aR	2	850

G1UQ1/400A/690V



G3MUQ1/1000A/690V



ULTRA QUICK

Dimensions:

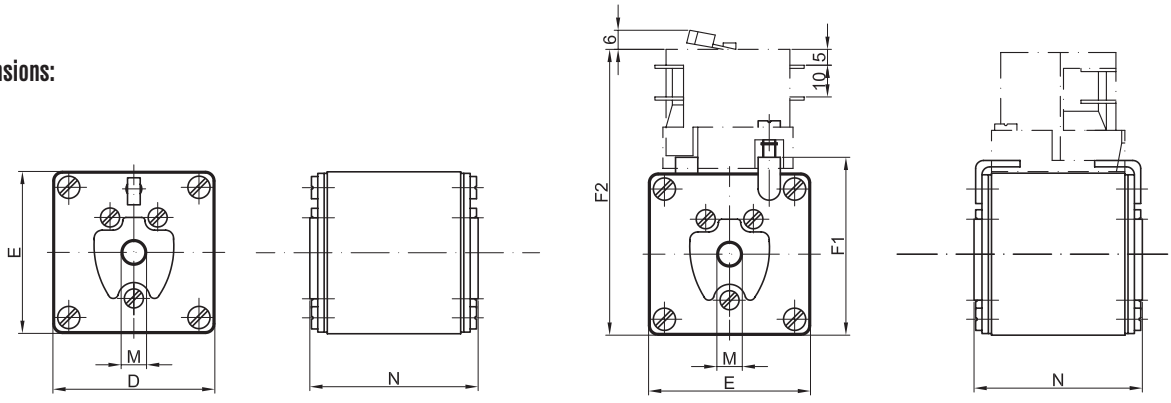

Size	D	E	F1	F2	M	N
1	51	51	56	90	M8	53
2	60	60	65	99	M10	53
3	75	75	80	114	M12	53

SYSTEM **NV/NH**

SERIES	TYPES	RATED VOLTAGE
UQ1	**M**	**~1000V**

Technical data:			Application:
Standards: **DIN 43620** **VDE 0636-201**	Breaking capacity: **~200kA** Rated voltage: **~1000V**	Characteristic: **aR**	Fuse-links type M are applied in fuse base (for example PK).

M0UQ1/100A/1000V



Size	In (A)	Type (visual indicator with grip for microswitch NVS 5)	Code No.	Operating I^2t-value (A^2s)	Power dissipation (W)	Char.	Packaging (pcs)	Weight (g)
0	32	M0UQ1/32A/1000V	004362208	480	12.5	aR	3	250
	40	M0UQ1/40A/1000V	004362210	840	14.4	aR	3	250
	50	M0UQ1/50A/1000V	004362211	1.300	19.3	aR	3	250
	63	M0UQ1/63A/1000V	004362212	2.320	22.3	aR	3	250
	80	M0UQ1/80A/1000V	004362213	3.900	28.8	aR	3	250
	100	M0UQ1/100A/1000V	004362214	8.000	31.5	aR	3	250
	125	M0UQ1/125A/1000V	004362215	18.300	34.3	aR	3	250
	160	M0UQ1/160A/1000V	004362216	35.300	40.5	aR	3	250

Dimensions:

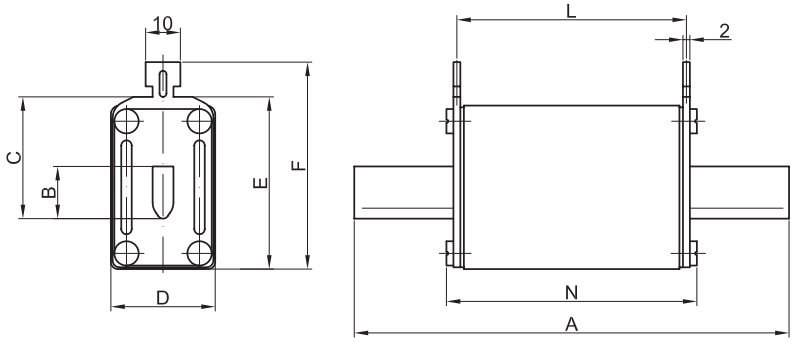

Size	A	B	C	D	E	F	L	N
0	125	15	35	30	50	59.5	66	72

SERIES	TYPES	RATED VOLTAGE
UQ1	**S110mm**	**~1000V**

Technical data:			Application:
Standards: **DIN 43653** **IEC 60269-4-1**	Breaking capacity: **~200kA** Rated voltage: **~1000V**	Characteristic: **aR**	Fuse-links type S 110mm of size 1, 2, 3 are applied in universal fuse base US1..3-1/80-110 and mounted by screws to busbars.

Size	In (A)	Type with visual indicator	Code No.	Operating I^2t-value (A^2s)	Power dissipation (W)	Type with centre trip indicator for microswitch MK	Code No.	Char.	Pack. (pcs)	Weight (g)
1	100	S1UQ1/110/100A/1000V	004363114	6.600	26.7	S1MUQ1/110/100A/1000V	004363714	aR	1	500
	125	S1UQ1/110/125A/1000V	004363115	12.600	32.6	S1MUQ1/110/125A/1000V	004363715	aR	1	500
	160	S1UQ1/110/160A/1000V	004363116	21.100	37.5	S1MUQ1/110/160A/1000V	004363716	aR	1	500
	200	S1UQ1/110/200A/1000V	004363117	34.500	46.7	S1MUQ1/110/200A/1000V	004363717	aR	1	500
	250	S1UQ1/110/250A/1000V	004363119	55.700	57.1	S1MUQ1/110/250A/1000V	004363719	aR	1	500
	315	S1UQ1/110/315A/1000V	004363121	106.000	63.1	S1MUQ1/110/315A/1000V	004363721	aR	1	500
2	315	S2UQ1/110/315A/1000V	004364121	106.000	67	S2MUQ1/110/315A/1000V	004364721	aR	1	650
	350	S2UQ1/110/350A/1000V	004364122	132.000	74.9	S2MUQ1/110/350A/1000V	004364722	aR	1	650
	400	S2UQ1/110/400A/1000V	004364123	193.000	84.9	S2MUQ1/110/400A/1000V	004364723	aR	1	650
	450	S2UQ1/110/450A/1000V	004364125	262.000	89.8	S2MUQ1/110/450A/1000V	004364725	aR	1	650
	500	S2UQ1/110/500A/1000V	004364126	345.000	96.1	S2MUQ1/110/500A/1000V	004364726	aR	1	650
3	500	S3UQ1/110/500A/1000V	004365126	345.000	108	S3MUQ1/110/500A/1000V	004365726	aR	3	850
	630	S3UQ1/110/630A/1000V	004365128	497.000	117	S3MUQ1/110/630A/1000V	004365728	aR	3	850
	710	S3UQ1/110/710A/1000V	004365129	795.000	136	S3MUQ1/110/710A/1000V	004365729	aR	3	850
	800	S3UQ1/110/800A/1000V	004365130	928.000	150	S3MUQ1/110/800A/1000V	004365730	aR	3	850

S1UQ1/110/100A/1000V



S3MUQ1/110/800A/1000V



Dimensions:

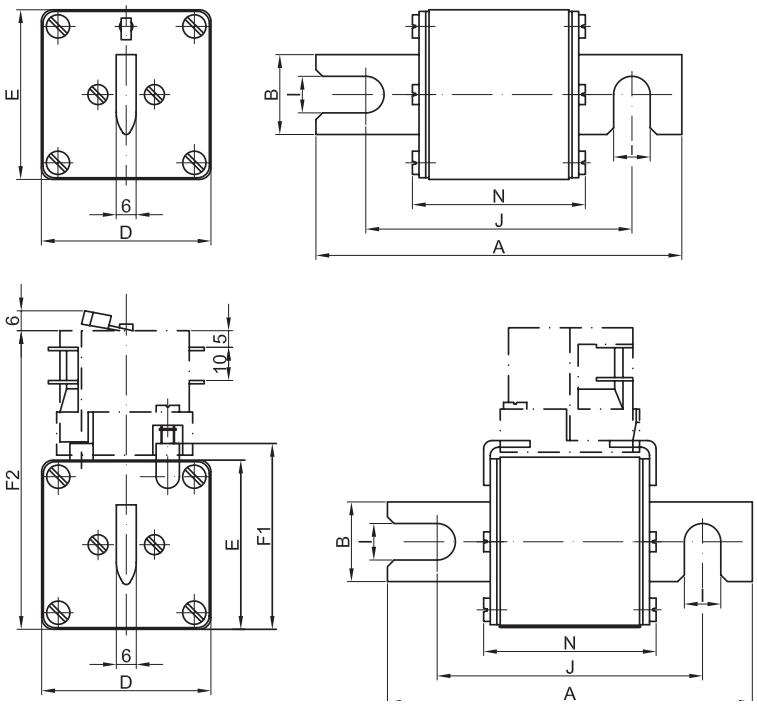

Size	A	B	D	E	F1	F2	I	J	N
1	140	24	51	51	56	90	11	110	74
2	140	30	60	60	65	99	11	110	74
3	140	37	75	75	80	114	11	110	74

SYSTEM **NV/NH**

SERIES	TYPES	RATED VOLTAGE
UQ1	**G**	**~1000V**

Technical data:			Application:
Standards: **IEC 60269-4-1**	Breaking capacity: **~200kA** Rated voltage: **~1000V**	Characteristic: **aR**	Fuse-links type G has threaded studs so fuses are mounted by special screws to busbars.

G1UQ1/100A/1000V



G1MUQ1/100A/1000V



Size	In (A)	Type with visual indicator	Code No.	Operating I^2t-value (A^2s)	Power dissipation (W)	Type with centre trip indicator for microswitch MK	Code No.	Char.	Pack. (pcs)	Weight (g)
1	100	G1UQ1/100A/1000V	004363514	6.600	26.7	G1MUQ1/100A/1000V	004363614	aR	1	500
	125	G1UQ1/125A/1000V	004363515	12.600	32.6	G1MUQ1/125A/1000V	004363615	aR	1	500
	160	G1UQ1/160A/1000V	004363516	21.100	37.5	G1MUQ1/160A/1000V	004363616	aR	1	500
	200	G1UQ1/200A/1000V	004363517	34.500	46.7	G1MUQ1/200A/1000V	004363617	aR	1	500
	250	G1UQ1/250A/1000V	004363519	55.700	57.1	G1MUQ1/250A/1000V	004363619	aR	1	500
	315	G1UQ1/315A/1000V	004363521	106.000	63.1	G1MUQ1/315A/1000V	004363621	aR	1	500
2	315	G2UQ1/315A/1000V	004364521	106.000	67	G2MUQ1/315A/1000V	004364621	aR	2	650
	350	G2UQ1/350A/1000V	004364522	132.000	74.9	G2MUQ1/350A/1000V	004364622	aR	2	650
	400	G2UQ1/400A/1000V	004364523	193.000	84.9	G2MUQ1/400A/1000V	004364623	aR	2	650
	450	G2UQ1/450A/1000V	004364525	262.000	89.8	G2MUQ1/450A/1000V	004364625	aR	2	650
	500	G2UQ1/500A/1000V	004364526	345.000	96.1	G2MUQ1/500A/1000V	004364626	aR	2	650
3	500	G3UQ1/500A/1000V	004365526	345.000	108	G3MUQ1/500A/1000V	004365626	aR	2	850
	630	G3UQ1/630A/1000V	004365528	497.000	117	G3MUQ1/630A/1000V	004365628	aR	2	850
	710	G3UQ1/710A/1000V	004365529	795.000	136	G3MUQ1/710A/1000V	004365629	aR	2	850
	800	G3UQ1/800A/1000V	004365530	928.000	150	G3MUQ1/800A/1000V	004365630	aR	2	850

Dimensions:

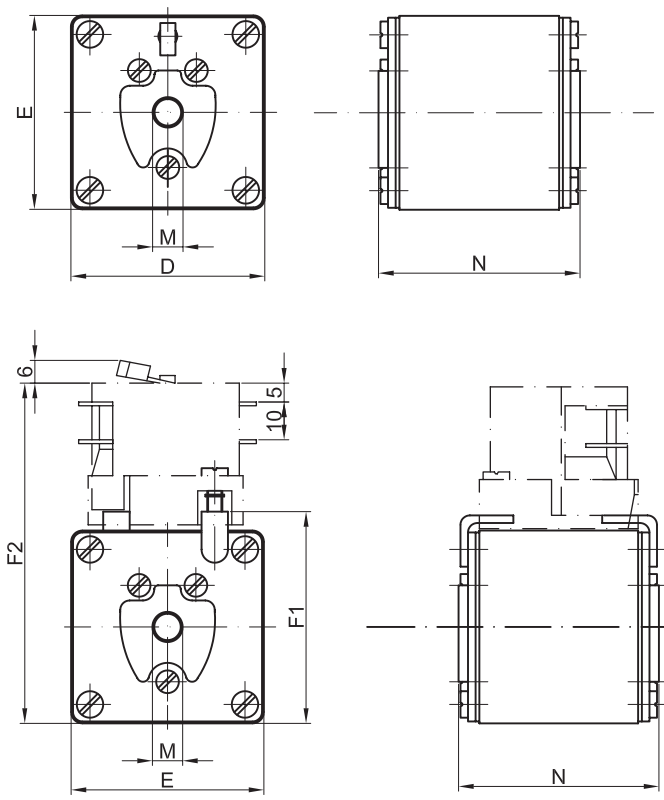

Size	D	E	F1	F2	M	N
1	51	51	56	90	M8	75
2	60	60	65	99	M10	75
3	75	75	80	114	M12	75

SERIES	TYPES	RATED VOLTAGE
UQ01	**M**	**~690V**

Technical data:			Application:
Standards: **DIN 43620** **VDE 0636-201**	Breaking capacity: **~200kA** Rated voltage: **~690V**	Characteristic: **aR**	Fuse-links type M are applied in fuse base (for example PK).

Size	In (A)	Type (visual indicator with grip for microswitch NVS 5)	Code No.	Operating I^2t-value (A^2s)	Power dissipation (W)	Char.	Packaging (pcs)	Weight (g)
00	10	M00UQ01/10A/690V	004371204	23	3	aR	3	140
	16	M00UQ01/16A/690V	004371205	46	4	aR	3	140
	20	M00UQ01/20A/690V	004371206	95	5	aR	3	140
	25	M00UQ01/25A/690V	004371207	165	6	aR	3	140
	32	M00UQ01/32A/690V	004371208	290	7	aR	3	140
	35	M00UQ01/35A/690V	004371209	400	8	aR	3	140
	40	M00UQ01/40A/690V	004371210	640	9	aR	3	140
	50	M00UQ01/50A/690V	004371211	1.000	10	aR	3	140
	63	M00UQ01/63A/690V	004371212	1.800	12.3	aR	3	140
	80	M00UQ01/80A/690V	004371213	2.800	16.3	aR	3	140
	100	M00UQ01/100A/690V	004371214	4.600	20	aR	3	140
	125	M00UQ01/125A/690V	004371215	8.000	26.9	aR	3	140
	160	M00UQ01/160A/690V	004371216	16.500	31.6	aR	3	140

M00UQ01/160A/690V



Dimensions:

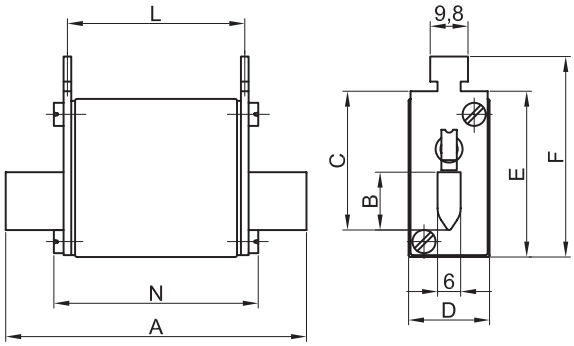

Size	A	B	C	D	E	F	L	N
00	78	15	35	30	42	51	48	52

SERIES	TYPES	RATED VOLTAGE
UQ01	**S80mm**	**~690V**

Technical data:			Application:
Standards: **DIN 43653** **IEC 60269-4-1**	Breaking capacity: **~200kA** Rated voltage: **~690V**	Characteristic: **aR**	Fuse-links type S of size 00C and 00 are applied in fuse base US00-1/80 and mounted by screws to busbars.

S00UQ01/80/350A/690V



Size	In (A)	Type with visual indicator	Code No.	Operating I^2-value (A^2s)	Power dissipation (W)	Char.	Packaging (pcs)	Weight (g)
00C	10	S00CUQ01/80/10A/690V	004371104	23	3	aR	3	150
	16	S00CUQ01/80/16A/690V	004371105	46	4	aR	3	150
	20	S00CUQ01/80/20A/690V	004371106	95	5	aR	3	150
	25	S00CUQ01/80/25A/690V	004371107	165	6	aR	3	150
	32	S00CUQ01/80/32A/690V	004371108	290	7	aR	3	150
	35	S00CUQ01/80/35A/690V	004371109	400	8	aR	3	150
	40	S00CUQ01/80/40A/690V	004371110	640	9	aR	3	150
	50	S00CUQ01/80/50A/690V	004371111	1.000	10	aR	3	150
	63	S00CUQ01/80/63A/690V	004371112	1.800	12.3	aR	3	150
	80	S00CUQ01/80/80A/690V	004371113	2.800	16.3	aR	3	150
	100	S00CUQ01/80/100A/690V	004371114	4.600	20	aR	3	150
	125	S00CUQ01/80/125A/690V	004371115	8.000	26.9	aR	3	150
	160	S00CUQ01/80/160A/690V	004371116	16.500	31.6	aR	3	150
	200	S00CUQ01/80/200A/690V	004371117	23.000	38.7	aR	3	150
	250	S0C0UQ01/80/250A/690V	004371119	46.000	43.8	aR	3	150
	315	S0C0UQ01/80/315A/690V	004371121	80.000	54	aR	3	150
00	350	S00UQ01/80/350A/690V	004371122	100.000	60	aR	3	150
	400*	S00UQ01/80/400A/500V	004371123	120.000	70	aR	3	150

*500V

Dimensions:

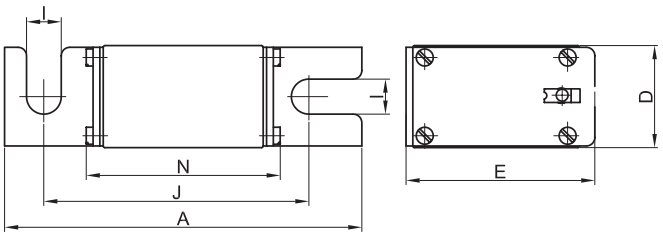

Size	A	D	E	I	J	N
00C	101	21	40	8.5	78	54
00	105	30	51	10.3	78	56

SERIES	TYPES	RATED VOLTAGE
UQ01	**S80mm**	**~690V**

Technical data:			Application:
Standards: **DIN 43653** **IEC 60269-4-1**	Breaking capacity: **~200kA** Rated voltage: **~690V**	Characteristic: **aR**	Fuse-links type S 80mm of size 1, 2, 3 are applied in universal fuse base US1..3-1/80-110 and mounted by screws to busbars.

Size	In (A)	Type with visual indicator	Code No.	Operating I^2t-value (A^2s)	Power dissipation (W)	Type with centre trip indicator for microswitch MK	Code No.	Char.	Pack. (pcs)	Weight (g)
1	80	S1UQ01/80/80A/690V	004383113	2.300	15.6	S1MUQ01/80/80A/690V	004383713	aR	1	500
	100	S1UQ01/80/100A/690V	004383114	4.600	20	S1MUQ01/80/100A/690V	004383714	aR	1	500
	125	S1UQ01/80/125A/690V	004383115	6.600	25	S1MUQ01/80/125A/690V	004383715	aR	1	500
	160	S1UQ01/80/160A/690V	004383116	10.000	32.2	S1MUQ01/80/160A/690V	004383716	aR	1	500
	200	S1UQ01/80/200A/690V	004383117	18.000	39.4	S1MUQ01/80/200A/690V	004383717	aR	1	500
	250	S1UQ01/80/250A/690V	004383119	32.000	49.4	S1MUQ01/80/250A/690V	004383719	aR	1	500
	315	S1UQ01/80/315A/690V	004383121	58.000	60	S1MUQ01/80/315A/690V	004383721	aR	1	500
	350	S1UQ01/80/350A/690V	004383122	78.000	63	S1MUQ01/80/350A/690V	004383722	aR	1	500
	400	S1UQ01/80/400A/690V	004383123	110.000	66	S1MUQ01/80/400A/690V	004383723	aR	1	500
	450	S1UQ01/80/450A/690V	004383125	155.000	72	S1MUQ01/80/450A/690V	004383725	aR	1	500
	500	S1UQ01/80/500A/690V	004383126	200.000	73	S1MUQ01/80/500A/690V	004383726	aR	1	500
	630	S1UQ01/80/630A/690V	004383128	330.000	86	S1MUQ01/80/630A/690V	004383728	aR	1	500
2	400	S2UQ01/80/400A/690V	004384123	85.000	70	S2MUQ01/80/400A/690V	004384723	aR	1	650
	450	S2UQ01/80/450A/690V	004384125	125.000	76	S2MUQ01/80/450A/690V	004384725	aR	1	650
	500	S2UQ01/80/500A/690V	004384126	165.000	80	S2MUQ01/80/500A/690V	004384726	aR	1	650
	630	S2UQ01/80/630A/690V	004384128	310.000	85	S2MUQ01/80/630A/690V	004384728	aR	1	650
	710	S2UQ01/80/710A/690V	004384129	460.000	91	S2MUQ01/80/710A/690V	004384729	aR	1	650
	800	S2UQ01/80/800A/690V	004384130	720.000	95	S2MUQ01/80/800A/690V	004384730	aR	1	650
3	630	S3UQ01/80/630A/690V	004385128	260.000	102	S3MUQ01/80/630A/690V	004385728	aR	1	850
	710	S3UQ01/80/710A/690V	004385129	330.000	109	S3MUQ01/80/710A/690V	004385729	aR	1	850
	800	S3UQ01/80/800A/690V	004385130	500.000	117	S3MUQ01/80/800A/690V	004385730	aR	1	850
	1000	S3UQ01/80/1000A/690V	004385132	1.000.000	131	S3MUQ01/80/1000A/690V	004385732	aR	1	850
	1250*	S3UQ01/80/1250A/500V	004385133	2.300.000	152	S3MUQ01/80/1250A/500V	004385733	aR	1	850

* 500V

S1UQ01/80/350A/690V



S1MUQ01/80/350A/690V



Dimensions:

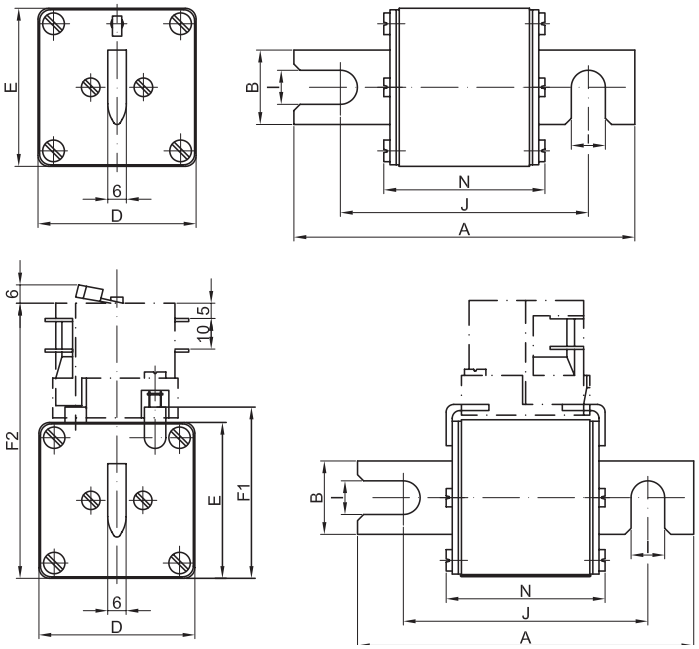

Size	A	B	D	E	F1	F2	I	J	N
1	110	24	51	51	56	90	11	80	52
2	110	30	60	60	65	99	11	80	52
3	110	37	75	75	80	114	11	80	52

SYSTEM **NV/NH**

SERIES	TYPES	RATED VOLTAGE
UQ01	**S110mm**	**~690V**

Technical data:			Application:
Standards: **DIN 43653** **IEC 60269-4-1**	Breaking capacity: **~200kA** Rated voltage: **~690V**	Characteristic: **aR**	Fuse-links type S 110mm of size 1, 2, 3 are applied in universal fuse base US1..3-1/80-110 and mounted by screws to busbars.

S1UQ01/110/450A/690V



S1MUQ01/110/450A/690V



Size	In (A)	Type with visual indicator	Code No.	Operating I^2t-value (A^2s)	Power dissipation (W)	Type with centre trip indicator for microswitch MK	Code No.	Char.	Pack. (pcs)	Weight (g)
1	80	S1UQ01/110/80A/690V	004393113	2.300	15.6	S1MUQ01/110/80A/690V	004393713	aR	1	500
	100	S1UQ01/110/100A/690V	004393114	4.600	20	S1MUQ01/110/100A/690V	004393714	aR	1	500
	125	S1UQ01/110/125A/690V	004393115	6.600	25	S1MUQ01/110/125A/690V	004393715	aR	1	500
	160	S1UQ01/110/160A/690V	004393116	10.000	32.2	S1MUQ01/110/160A/690V	004393716	aR	1	500
	200	S1UQ01/110/200A/690V	004393117	18.000	39.4	S1MUQ01/110/200A/690V	004393717	aR	1	500
	250	S1UQ01/110/250A/690V	004393119	32.000	49.4	S1MUQ01/110/250A/690V	004393719	aR	1	500
	315	S1UQ01/110/315A/690V	004393121	58.000	60	S1MUQ01/110/315A/690V	004393721	aR	1	500
	350	S1UQ01/110/350A/690V	004393122	78.000	63	S1MUQ01/110/350A/690V	004393722	aR	1	500
	400	S1UQ01/110/400A/690V	004393123	110.000	66	S1MUQ01/110/400A/690V	004393723	aR	1	500
	450	S1UQ01/110/450A/690V	004393125	155.000	72	S1MUQ01/110/450A/690V	004393725	aR	1	500
	500	S1UQ01/110/500A/690V	004393126	200.000	73	S1MUQ01/110/500A/690V	004393726	aR	1	500
	630	S1UQ01/110/630A/690V	004393128	330.000	86	S1MUQ01/110/630A/690V	004393728	aR	1	500
2	400	S2UQ01/110/400A/690V	004394123	85.000	70	S2MUQ01/110/400A/690V	004394723	aR	1	650
	450	S2UQ01/110/450A/690V	004394125	125.000	76	S2MUQ01/110/450A/690V	004394725	aR	1	650
	500	S2UQ01/110/500A/690V	004394126	165.000	80	S2MUQ01/110/500A/690V	004394726	aR	1	650
	630	S2UQ01/110/630A/690V	004394128	310.000	85	S2MUQ01/110/630A/690V	004394728	aR	1	650
	710	S2UQ01/110/710A/690V	004394129	460.000	91	S2MUQ01/110/710A/690V	004394729	aR	1	650
	800	S2UQ01/110/800A/690V	004394130	720.000	95	S2MUQ01/110/800A/690V	004394730	aR	1	650
3	630	S3UQ01/110/630A/690V	004395128	260.000	102	S3MUQ01/110/630A/690V	004395728	aR	3	850
	710	S3UQ01/110/710A/690V	004395129	330.000	109	S3MUQ01/110/710A/690V	004395729	aR	3	850
	800	S3UQ01/110/800A/690V	004395130	500.000	117	S3MUQ01/110/800A/690V	004395730	aR	3	850
	1000	S3UQ01/110/1000A/690V	004395132	1.000.000	131	S3MUQ01/110/1000A/690V	004395732	aR	3	850
	1250*	S3UQ01/110/1250A/500V	004395133	2.300.000	152	S3MUQ01/110/1250A/500V	004395733	aR	3	850

* 500V

Dimensions:

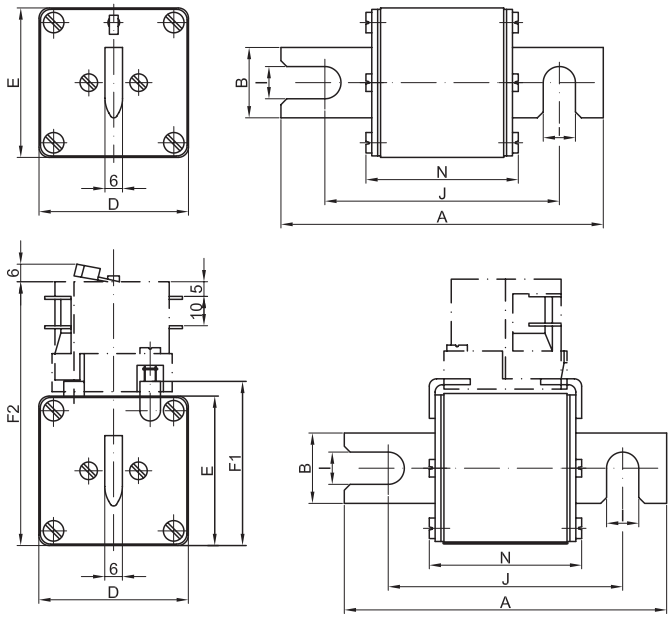

Size	A	B	D	E	F1	F2	I	J	N
1	140	24	51	51	56	90	11	110	52
2	140	30	60	60	65	99	11	110	52
3	140	37	75	75	80	114	11	110	52

SERIES	TYPES	RATED VOLTAGE
UQ01	**G**	**~690V**

Technical data:			Application:
Standards: **IEC 60269-4-1**	Breaking capacity: **~200kA** Rated voltage: **~690V**	Characteristic: **aR**	Fuse-links type G has threaded studs so fuses are mounted by special screws to busbars.

Size	In (A)	Type with visual indicator	Code No.	Operating I^2t-value (A^2s)	Power dissipation (W)	Type with centre trip indicator for microswitch MK	Code No.	Char.	Pack. (pcs)	Weight (g)
1	80	G1UQ01/80A/690V	004373513	2.300	15.6	G1MUQ01/80A/690V	004373613	aR	2	500
	100	G1UQ01/100A/690V	004373514	4.600	20	G1MUQ01/100A/690V	004373614	aR	2	500
	125	G1UQ01/125A/690V	004373515	6.600	25	G1MUQ01/125A/690V	004373615	aR	2	500
	160	G1UQ01/160A/690V	004373516	10.000	32.2	G1MUQ01/160A/690V	004373616	aR	2	500
	200	G1UQ01/200A/690V	004373517	18.000	39.4	G1MUQ01/200A/690V	004373617	aR	2	500
	250	G1UQ01/250A/690V	004373519	32.000	49.4	G1MUQ01/250A/690V	004373619	aR	2	500
	315	G1UQ01/315A/690V	004373521	58.000	60	G1MUQ01/315A/690V	004373621	aR	2	500
	350	G1UQ01/350A/690V	004373522	78.000	63	G1MUQ01/350A/690V	004373622	aR	2	500
	400	G1UQ01/400A/690V	004373523	110.000	66	G1MUQ01/400A/690V	004373623	aR	2	500
	450	G1UQ01/450A/690V	004373525	155.000	72	G1MUQ01/450A/690V	004373625	aR	2	500
	500	G1UQ01/500A/690V	004373526	200.000	73	G1MUQ01/500A/690V	004373626	aR	2	500
	630	G1UQ01/630A/690V	004373528	330.000	86	G1MUQ01/630A/690V	004373628	aR	2	500
2	400	G2UQ01/400A/690V	004374523	85.000	70	G2MUQ01/400A/690V	004374623	aR	2	650
	450	G2UQ01/450A/690V	004374525	125.000	76	G2MUQ01/450A/690V	004374625	aR	2	650
	500	G2UQ01/500A/690V	004374526	165.000	80	G2MUQ01/500A/690V	004374626	aR	2	650
	630	G2UQ01/630A/690V	004374528	310.000	85	G2MUQ01/630A/690V	004374628	aR	2	650
	710	G2UQ01/710A/690V	004374529	460.000	91	G2MUQ01/710A/690V	004374629	aR	2	650
	800	G2UQ01/800A/690V	004374530	720.000	95	G2MUQ01/800A/690V	004374630	aR	2	650
3	630	G3UQ01/630A/690V	004375528	260.000	102	G3MUQ01/630A/690V	004375628	aR	2	850
	710	G3UQ01/710A/690V	004375529	330.000	109	G3MUQ01/710A/690V	004375629	aR	2	850
	800	G3UQ01/800A/690V	004375530	500.000	117	G3MUQ01/800A/690V	004375630	aR	2	850
	1000	G3UQ01/1000A/690V	004375532	1.000.000	131	G3MUQ01/1000A/690V	004375632	aR	2	850
	1250*	G3UQ01/1250A/500V	004375533	2.300.000	152	G3MUQ01/1250A/500V	004375633	aR	2	850

* 500V

G1UQ01/630A/690V



G2MUQ01/630A/690V



Dimensions:

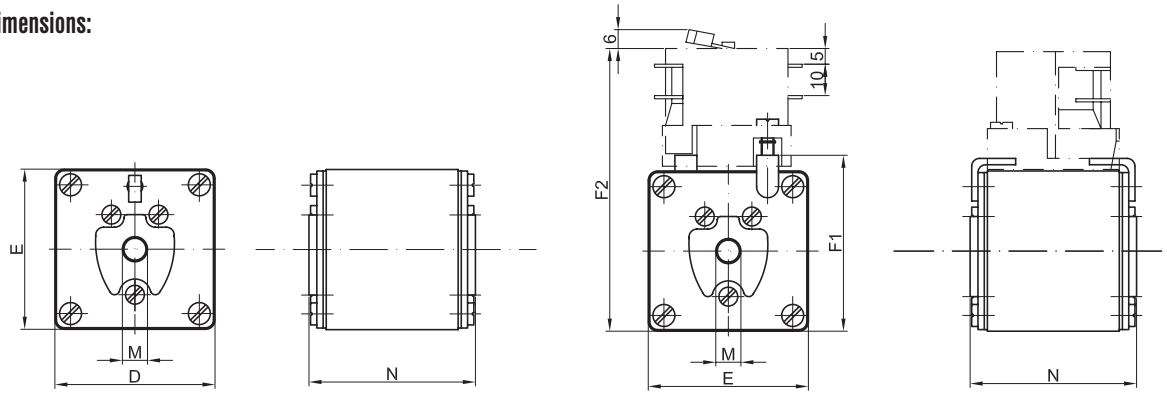

Size	D	E	F1	F2	M	N
1	51	51	56	90	M8	53
2	60	60	65	99	M10	53
3	75	75	80	114	M12	53

SERIES	TYPES	RATED VOLTAGE
UQ01	**S80mm**	**~1000V**

Technical data:			Application:
Standards: **DIN 43653** **IEC 60269-4-1**	Breaking capacity: **~200kA** Rated voltage: **~1000V**	Characteristic: **aR**	Fuse-links type S of size 00C and 00 are applied in fuse base US00-1/80 and mounted by screws to busbars.

S00UQ01/80/200A/1000V



Size	In (A)	Type with visual indicator	Code No.	Operating I^2t-value (A^2s)	Power dissipation (W)	Char.	Packaging (pcs)	Weight (g)
00	32	S00UQ01/80/32A/1000V	004301108	200	15.1	aR	3	250
	40	S00UQ01/80/40A/1000V	004301110	330	18.1	aR	3	250
	50	S00UQ01/80/50A/1000V	004301111	670	20	aR	3	250
	63	S00UQ01/80/63A/1000V	004301112	1.300	24.3	aR	3	250
	80	S00UQ01/80/80A/1000V	004301113	2.400	27.4	aR	3	250
	100	S00UQ01/80/100A/1000V	004301114	4.700	30	aR	3	250
	125	S00UQ01/80/125A/1000V	004301115	10.000	38.2	aR	3	250
	160	S00UQ01/80/160A/1000V	004301116	16.000	47.2	aR	3	250
	200	S00UQ01/80/200A/1000V	004301117	30.000	57	aR	3	250
	250	S00UQ01/80/250A/1000V	004301119	58.000	67	aR	3	250
	315*	S00UQ01/80/315A/900V	004301121	110.000	78	aR	3	250

*900V

Dimensions:

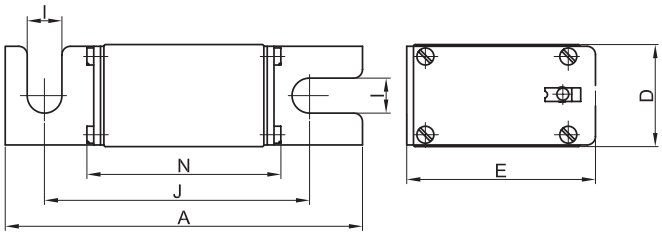

Size	A	D	E	I	J	N
00	105	30	51	10	78	56

SERIES	TYPES	RATED VOLTAGE
UQ01	**S110mm**	**~1000V**

Technical data:			Application:
Standards: **DIN 43653** **IEC 60269-4-1**	Breaking capacity: **~200kA** Rated voltage: **~1000V**	Characteristic: **aR**	Fuse-links type S 110mm of size 1, 2, 3 are applied in universal fuse base US1..3-1/80-110 and mounted by screws to busbars.

Size	In (A)	Type with visual indicator	Code No.	Operating I^2t-value (A^2s)	Power dissipation (W)	Type with centre trip indicator for microswitch MK	Code No.	Char.	Pack. (pcs)	Weight (g)
1	63	S1UQ01/110/63A/1000V	004303112	2.000	15.1	S1MUQ01/110/63A/1000V	004303712	aR	1	500
	80	S1UQ01/110/80A/1000V	004303113	3.400	20	S1MUQ01/110/80A/1000V	004303713	aR	1	500
	100	S1UQ01/110/100A/1000V	004303114	6.100	25	S1MUQ01/110/100A/1000V	004303714	aR	1	500
	125	S1UQ01/110/125A/1000V	004303115	11.000	30	S1MUQ01/110/125A/1000V	004303715	aR	1	500
	160	S1UQ01/110/160A/1000V	004303116	17.000	35	S1MUQ01/110/160A/1000V	004303716	aR	1	500
	200	S1UQ01/110/200A/1000V	004303117	31.000	45.3	S1MUQ01/110/200A/1000V	004303717	aR	1	500
	250	S1UQ01/110/250A/1000V	004303119	50.000	54	S1MUQ01/110/250A/1000V	004303719	aR	1	500
	315	S1UQ01/110/315A/1000V	004303121	110.000	60	S1MUQ01/110/315A/1000V	004303721	aR	1	500
	350	S1UQ01/110/350A/1000V	004303122	150.000	65	S1MUQ01/110/350A/1000V	004303722	aR	1	500
	400	S1UQ01/110/400A/1000V	004303123	200.000	70	S1MUQ01/110/400A/1000V	004303723	aR	1	500
	450	S1UQ01/110/450A/1000V	004303125	310.000	74	S1MUQ01/110/450A/1000V	004303725	aR	1	500
	500	S1UQ01/110/500A/1000V	004303126	400.000	80	S1MUQ01/110/500A/1000V	004303726	aR	1	500
2	315	S2UQ01/110/315A/1000V	004304121	85.000	66	S2MUQ01/110/315A/1000V	004304721	aR	1	650
	350	S2UQ01/110/350A/1000V	004304122	130.000	70	S2MUQ01/110/350A/1000V	004304722	aR	1	650
	400	S2UQ01/110/400A/1000V	004304123	170.000	80	S2MUQ01/110/400A/1000V	004304723	aR	1	650
	450	S2UQ01/110/450A/1000V	004304125	220.000	86	S2MUQ01/110/450A/1000V	004304725	aR	1	650
	500	S2UQ01/110/500A/1000V	004304126	320.000	90	S2MUQ01/110/500A/1000V	004304726	aR	1	650
	630	S2UQ01/110/630A/1000V	004304128	600.000	108	S2MUQ01/110/630A/1000V	004304728	aR	1	650
3	500	S3UQ01/110/500A/1000V	004305126	250.000	100	S3MUQ01/110/500A/1000V	004305726	aR	3	850
	630	S3UQ01/110/630A/1000V	004305128	500.000	110	S3MUQ01/110/630A/1000V	004305728	aR	3	850
	710	S3UQ01/110/710A/1000V	004305129	670.000	125	S3MUQ01/110/710A/1000V	004305729	aR	3	850
	800	S3UQ01/110/800A/1000V	004305130	870.000	136	S3MUQ01/110/800A/1000V	004305730	aR	3	850
	1000	S3UQ01/110/1000A/1000V	004305132	2.000.000	157	S3MUQ01/110/1000A/1000V	004305732	aR	3	850

S1UQ01/110/400A/1000V



S1MUQ01/110/400A/1000V



Dimensions:

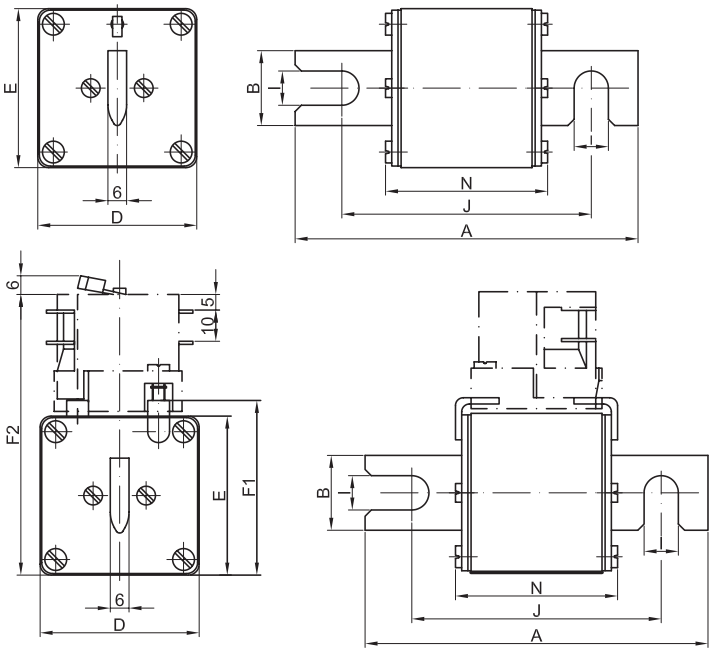

Size	A	B	D	E	F1	F2	I	J	N
1	140	24	51	51	56	90	11	110	74
2	140	30	60	60	65	99	11	110	74
3	140	37	75	75	80	114	11	110	74

SYSTEM **NV/NH**

SERIES	TYPES	RATED VOLTAGE
UQ01	**G**	**~1000V**

Technical data:			Application:
Standards: **IEC 60269-4-1**	Breaking capacity: **~200kA** Rated voltage: **~690V**	Characteristic: **aR**	Fuse-links type G has threaded studs so fuses are mounted by special screws to busbars.

G3UQ01/800A/1000V



G1MUQ01/400A/1000V



Size	In (A)	Type with visual indicator	Code No.	Operating I^2t-value (A^2s)	Power dissipation (W)	Type with centre trip indicator for microswitch MK	Code No.	Char.	Pack. (pcs)	Weight (g)
1	63	G1UQ01/63A/1000V	004303512	2.000	15.1	G1MUQ01/63A/1000V	004303612	aR	1	500
	80	G1UQ01/80A/1000V	004303513	3.400	20	G1MUQ01/80A/1000V	004303613	aR	1	500
	100	G1UQ01/100A/1000V	004303514	6.100	25	G1MUQ01/100A/1000V	004303614	aR	1	500
	125	G1UQ01/125A/1000V	004303515	11.000	30	G1MUQ01/125A/1000V	004303615	aR	1	500
	160	G1UQ01/160A/1000V	004303516	17.000	35	G1MUQ01/160A/1000V	004303616	aR	1	500
	200	G1UQ01/200A/1000V	004303517	31.000	45.3	G1MUQ01/200A/1000V	004303617	aR	1	500
	250	G1UQ01/250A/1000V	004303519	50.000	54	G1MUQ01/250A/1000V	004303619	aR	1	500
	315	G1UQ01/315A/1000V	004303521	110.000	60	G1MUQ01/315A/1000V	004303621	aR	1	500
	350	G1UQ01/350A/1000V	004303522	150.000	65	G1MUQ01/350A/1000V	004303622	aR	1	500
	400	G1UQ01/400A/1000V	004303523	200.000	70	G1MUQ01/400A/1000V	004303623	aR	1	500
	450	G1UQ01/450A/1000V	004303525	310.000	74	G1MUQ01/450A/1000V	004303625	aR	1	500
	500	G1UQ01/500A/1000V	004303526	400.000	80	G1MUQ01/500A/1000V	004303626	aR	1	500
2	315	G2UQ01/315A/1000V	004304521	85.000	66	G2MUQ01/315A/1000V	004304621	aR	2	650
	350	G2UQ01/350A/1000V	004304522	130.000	70	G2MUQ01/350A/1000V	004304622	aR	2	650
	400	G2UQ01/400A/1000V	004304523	170.000	80	G2MUQ01/400A/1000V	004304623	aR	2	650
	450	G2UQ01/450A/1000V	004304525	220.000	86	G2MUQ01/450A/1000V	004304625	aR	2	650
	500	G2UQ01/500A/1000V	004304526	320.000	90	G2MUQ01/500A/1000V	004304626	aR	2	650
	630	G2UQ01/630A/1000V	004304528	600.000	108	G2MUQ01/630A/1000V	004304628	aR	2	650
3	500	G3UQ01/500A/1000V	004305526	250.000	100	G3MUQ01/500A/1000V	004305626	aR	2	850
	630	G3UQ01/630A/1000V	004305528	500.000	110	G3MUQ01/630A/1000V	004305628	aR	2	850
	710	G3UQ01/710A/1000V	004305529	670.000	125	G3MUQ01/710A/1000V	004305629	aR	2	850
	800	G3UQ01/800A/1000V	004305530	870.000	136	G3MUQ01/800A/1000V	004305630	aR	2	850
	1000	G3UQ01/1000A/1000V	004305532	2.000.000	157	G3MUQ01/1000A/1000V	004305632	aR	2	850

Dimensions:

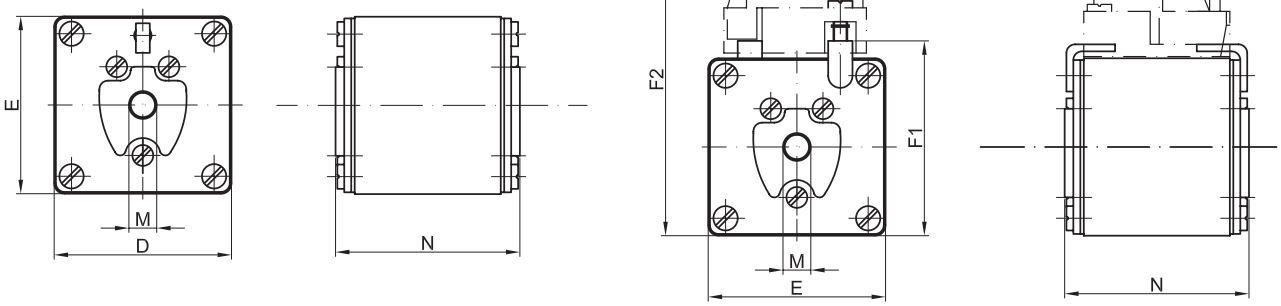

Size	D	E	F1	F2	M	N
1	51	51	56	90	M8	75
2	60	60	65	99	M10	75
3	75	75	80	114	M12	75

SERIES	TYPES	RATED VOLTAGE
UQ2	**M**	**~500V**

Technical data:			Application:
Standards: **DIN 43620** **VDE 0636-201**	Breaking capacity: **~200kA** Rated voltage: **~500V**	Characteristic: **aR**	Fuse-links type M are applied in fuse base (for example PK).

Size	In (A)	Type (visual indicator with grip for microswitch NVS 5)	Code No.	Operating I^2t-value (A^2s)	Power dissipation (W)	Char.	Packaging (pcs)	Weight (g)
00C	6	M00CUQ2/6A/500V	004711203	45	7	gR	3/60	130
	10	M00CUQ2/10A/500V	004711204	60	8	gR	3/60	130
	16	M00CUQ2/16A/500V	004711205	86	9	gR	3/60	130
	20	M00CUQ2/20A/500V	004711206	165	10.9	gR	3/60	130
	25	M00CUQ2/25A/500V	004711207	300	13.4	gR	3/60	130
	32	M00CUQ2/32A/500V	004711208	450	14.3	gR	3/60	130
	35	M00CUQ2/35A/500V	004711209	670	15	gR	3/60	130
	40	M00CUQ2/40A/500V	004711210	1.000	16.2	gR	3/60	130
	50	M00CUQ2/50A/500V	004711211	1.500	17.5	gR	3/60	130
	63	M00CUQ2/63A/500V	004711212	2.200	20	gR	3/60	130
	80	M00CUQ2/80A/500V	004711213	3.300	23.1	gR	3/60	130
	100	M00CUQ2/100A/500V	004711214	7.200	26.4	gR	3/60	130
	125	M00CUQ2/125A/500V	004711215	10.000	34	gR	3/60	130
	160	M00CUQ2/160A/500V	004711216	21.000	40.1	gR	3/60	130
1	35	M1UQ2/35A/500V	004713209	670	15	gR	3	420
	40	M1UQ2/40A/500V	004713210	1.000	16.2	gR	3	420
	50	M1UQ2/50A/500V	004713211	1.500	17.5	gR	3	420
	63	M1UQ2/63A/500V	004713212	2.200	20	gR	3	420
	80	M1UQ2/80A/500V	004713213	3.300	23.1	gR	3	420
	100	M1UQ2/100A/500V	004713214	7.200	26.4	gR	3	420
	125	M1UQ2/125A/500V	004713215	10.000	34	gR	3	420
	160	M1UQ2/160A/500V	004713216	21.000	40.1	gR	3	420
	200	M1UQ2/200A/500V	004713217	30.000	43.8	gR	3	420
	224	M1UQ2/224A/500V	004713218	41.000	48.5	gR	3	420
	250	M1UQ2/250A/500V	004713219	52.000	53	gR	3	420
2	125	M2UQ2/125A/500V	004714215	10.000	34	gR	3	660
	160	M2UQ2/160A/500V	004714216	21.000	40.1	gR	3	660
	200	M2UQ2/200A/500V	004714217	30.000	43.8	gR	3	660
	224	M2UQ2/224A/500V	004714218	41.000	48.5	gR	3	660
	250	M2UQ2/250A/500V	004714219	52.000	53	gR	3	660
	315	M2UQ2/315A/500V	004714221	82.000	63	gR	3	660
	350	M2UQ2/350A/500V	004714222	110.000	66	gR	3	660
	400	M2UQ2/400A/500V	004714223	160.000	70	gR	3	660
3	250	M3UQ2/250A/500V	004715219	52.000	53	gR	1	870
	315	M3UQ2/315A/500V	004715221	82.000	63	gR	1	870
	350	M3UQ2/350A/500V	004715222	110.000	66	gR	1	870
	400	M3UQ2/400A/500V	004715223	160.000	70	gR	1	870
	425	M3UQ2/425A/500V	004715224	200.000	75	gR	1	870
	500	M3UQ2/500A/500V	004715226	260.000	96	gR	1	870
	630	M3UQ2/630A/500V	004715228	340.000	135	gR	1	870
4	800	M4UQ2/800A/500V	004716130	620.000	164	gR	1	2350
	1000	M4UQ2/1000A/500V	004716132	1.150.000	188	gR	1	2350
	1250	M4UQ2/1250A/500V	004716133	2.000.000	246	gR	1	2350
4a	800	M4aUQ2/800A/500V	004717230	620.000	164	gR	1	2700
	1000	M4aUQ2/1000A/500V	004717232	1.150.000	188	gR	1	2700
	1250	M4aUQ2/1250A/500V	004717233	2.000.000	246	gR	1	2700
	1500	M4aUQ2/1500A/500V	004717235	3.800.000	310	gR	1	2700

M00CUQ2/125A/500V



M1UQ2/200A/500V



SERIES	TYPES	RATED VOLTAGE
UQ2	**M**	**~500V**

Dimensions:

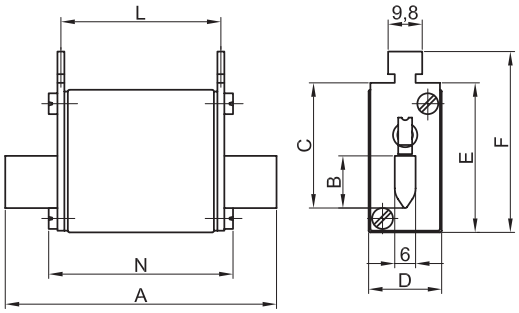

Size	A	B	C	D	E	F	L	N
00C	78	15	35	21	42	52	46	53

Dimensions:

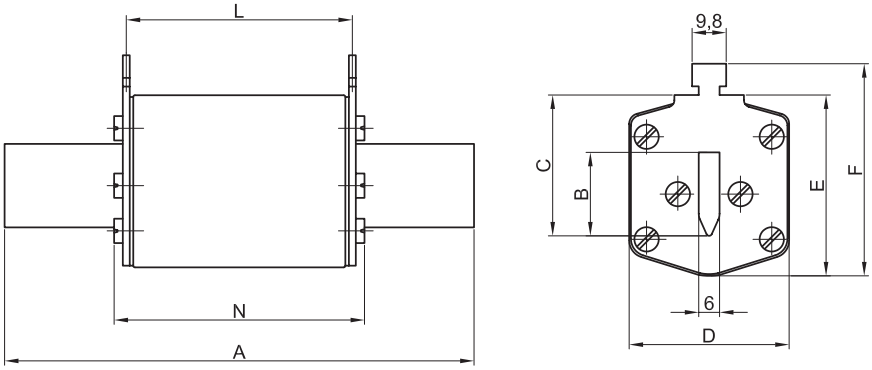

Size	A	B	C	D	E	L	N
1	135	24	40	46	52	65	73
2	150	30	48	54	61	65	73
3	150	37	60	64	74	65	73
4	200	50	87	95	112	65	78
4a	200	50	85	95	112	87	97

SERIES	TYPES	RATED VOLTAGE
UQ2	**S80mm**	**~500V**

Technical data:			Application:
Standards: **DIN 43653** **IEC 60269-4-1**	Breaking capacity: **~200kA** Rated voltage: **~500V**	Characteristic: **gR**	Fuse-links type S of size 00C is applied in fuse base US00-1/80 and mounted by screws to busbars.

Size	In (A)	Type with visual indicator	Code No.	Operating I^2t-value (A^2s)	Power dissipation (W)	Char.	Packaging (pcs)	Weight (g)
00C	16	S00CUQ2/80/16A/500V	004711105	86	9	gR	3	120
	20	S00CUQ2/80/20A/500V	004711106	165	10.9	gR	3	120
	25	S00CUQ2/80/25A/500V	004711107	300	13.4	gR	3	120
	32	S00CUQ2/80/32A/500V	004711108	450	14.3	gR	3	120
	35	S00CUQ2/80/35A/500V	004711109	670	15	gR	3	120
	40	S00CUQ2/80/40A/500V	004711110	1.000	16.2	gR	3	120
	50	S00CUQ2/80/50A/500V	004711111	1.500	17.5	gR	3	120
	63	S00CUQ2/80/63A/500V	004711112	2.200	20	gR	3	120
	80	S00CUQ2/80/80A/500V	004711113	3.300	23.1	gR	3	120
	100	S00CUQ2/80/100A/500V	004711114	7.200	26.4	gR	3	120
	125	S00CUQ2/80/125A/500V	004711115	10.000	34	gR	3	120
	160	S00CUQ2/80/160A/500V	004711116	21.000	40.1	gR	3	120

S00CUQ2/80/160A/500V



Dimensions:

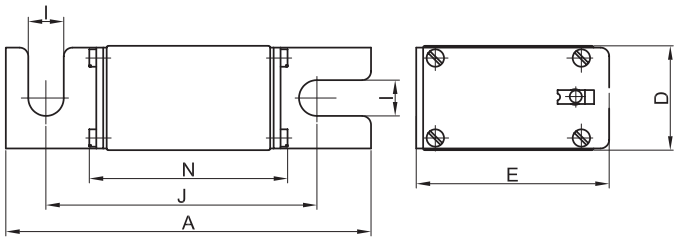

Size	A	D	E	I	J	N
00C	101	21	40	8.5	78	54

SYSTEM **NV/NH**

SERIES	TYPES	RATED VOLTAGE
UQ2	**S110mm**	**~500V**

Technical data:			Application:
Standards: **DIN 43653** **IEC 60269-4-1**	Breaking capacity: **~200kA** Rated voltage: **~500V**	Characteristic: **gR**	Fuse-links type S 110mm of size 1, 2, 3 are applied in universal fuse base US1..3-1/80-110 and mounted by screws to busbars.

S2UQ2/110/400A/500V



Size	In (A)	Type with visual indicator	Code No.	Operating I^2t-value (A^2s)	Power dissipation (W)	Char.	Packaging (pcs)	Weight (g)
1	35	S1UQ2/110/35A/500V	004713109	670	15	gR	1	390
	40	S1UQ2/110/40A/500V	004713110	1.000	16.2	gR	1	390
	50	S1UQ2/110/50A/500V	004713111	1.500	17.5	gR	1	390
	63	S1UQ2/110/63A/500V	004713112	2.200	20	gR	1	390
	80	S1UQ2/110/80A/500V	004713113	3.300	23.1	gR	1	390
	100	S1UQ2/110/100A/500V	004713114	7.200	26.4	gR	1	390
	125	S1UQ2/110/125A/500V	004713115	10.000	34	gR	1	390
	160	S1UQ2/110/160A/500V	004713116	21.000	40.1	gR	1	390
	200	S1UQ2/110/200A/500V	004713117	30.000	43.8	gR	1	390
	224	S1UQ2/110/224A/500V	004713118	41.000	48.5	gR	1	390
	250	S1UQ2/110/250A/500V	004713119	52.000	53	gR	1	390
2	125	S2UQ2/110/125A/500V	004714115	10.000	34	gR	1	510
	160	S2UQ2/110/160A/500V	004714116	21.000	40.1	gR	1	510
	200	S2UQ2/110/200A/500V	004714117	30.000	43.8	gR	1	510
	224	S2UQ2/110/224A/500V	004714118	41.000	48.5	gR	1	510
	250	S2UQ2/110/250A/500V	004714119	52.000	53	gR	1	510
	315	S2UQ2/110/315A/500V	004714121	82.000	63	gR	1	510
	350	S2UQ2/110/350A/500V	004714122	110.000	66	gR	1	510
	400	S2UQ2/110/400A/500V	004714123	160.000	70	gR	1	510
3	250	S3UQ2/110/250A/500V	004715119	52.000	53	gR	1	830
	315	S3UQ2/110/315A/500V	004715121	82.000	63	gR	1	830
	350	S3UQ2/110/350A/500V	004715122	110.000	66	gR	1	830
	400	S3UQ2/110/400A/500V	004715123	160.000	70	gR	1	830
	425	S3UQ2/110/425A/500V	004715124	200.000	70	gR	1	830
	500	S3UQ2/110/500A/500V	004715126	260.000	96	gR	1	830
	630	S3UQ2/110/630A/500V	004715128	340.000	135	gR	1	830

Dimensions:

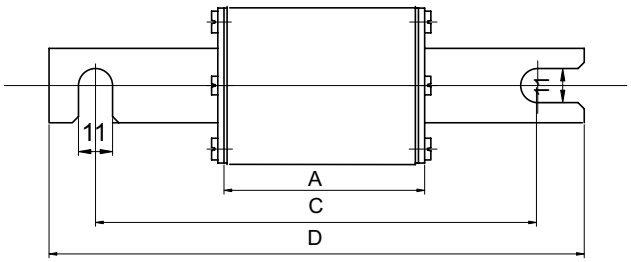

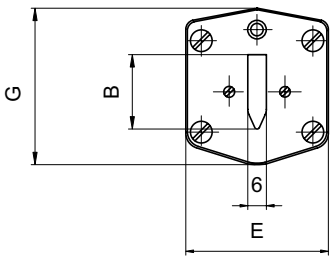

Size	A	B	C	D	E	G
1	72	24	110	140	46	51
2	72	30	110	140	54	59
3	72	37	110	140	64	70

SERIES	TYPES	RATED VOLTAGE
UQ2	**G**	**~500V**

Technical data:			Application:
Standards: **IEC 60269-4-1**	Breaking capacity: **~200kA** Rated voltage: **~500V**	Characteristic: **gR**	Fuse-links type G has threaded studs so fuses are mounted by special screws to busbars.

Size	In (A)	Type with visual indicator	Code No.	Operating I^2t-value (A^2s)	Power dissipation (W)	Char.	Packaging (pcs)	Weight (g)
1	35	G1UQ2/35A/500V	004713509	670	15	gR	1	360
	40	G1UQ2/40A/500V	004713510	1.000	16.2	gR	1	360
	50	G1UQ2/50A/500V	004713511	1.500	17.5	gR	1	360
	63	G1UQ2/63A/500V	004713512	2.200	20	gR	1	360
	80	G1UQ2/80A/500V	004713513	3.300	23.1	gR	1	360
	100	G1UQ2/100A/500V	004713514	7.200	26.4	gR	1	360
	125	G1UQ2/125A/500V	004713515	10.000	34	gR	1	360
	160	G1UQ2/160A/500V	004713516	21.000	40.1	gR	1	360
	200	G1UQ2/200A/500V	004713517	30.000	43.8	gR	1	360
	224	G1UQ2/224A/500V	004713518	41.000	48.5	gR	1	360
	250	G1UQ2/250A/500V	004713519	52.000	53	gR	1	360
2	125	G2UQ2/125A/500V	004714515	10.000	34	gR	1	520
	160	G2UQ2/160A/500V	004714516	21.000	40.1	gR	1	520
	200	G2UQ2/200A/500V	004714517	30.000	43.8	gR	1	520
	224	G2UQ2/224A/500V	004714518	41.000	48.5	gR	1	520
	250	G2UQ2/250A/500V	004714519	52.000	53	gR	1	520
	315	G2UQ2/315A/500V	004714521	82.000	63	gR	1	520
	350	G2UQ2/350A/500V	004714522	110.000	66	gR	1	520
	400	G2UQ2/400A/500V	004714523	160.000	70	gR	1	520
3	250	G3UQ2/250A/500V	004715519	52.000	53	gR	1	800
	315	G3UQ2/315A/500V	004715521	82.000	63	gR	1	800
	350	G3UQ2/350A/500V	004715522	110.000	66	gR	1	800
	400	G3UQ2/400A/500V	004715523	160.000	70	gR	1	800
	425	G3UQ2/425A/500V	004715524	200.000	70	gR	1	800
	500	G3UQ2/500A/500V	004715526	260.000	96	gR	1	800
	630	G3UQ2/630A/500V	004715528	340.000	135	gR	1	800

G2UQ2/350A/500V



Dimensions:

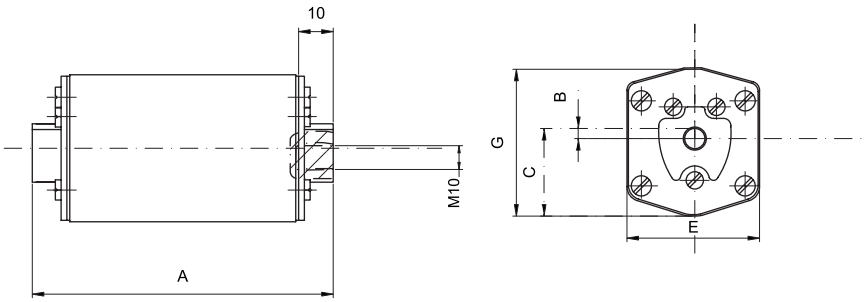

Size	A	B	C	E	G
1	85	8.5	25	46	50
2	72	2	29.5	54	59
3	83	2	34	64	70

SERIES	TYPES	RATED VOLTAGE
UQ2	**M**	**~690V**

Technical data:			Application:
Standards: **DIN 43620** VDE 0636-201	Breaking capacity: **~200kA** Rated voltage: **~690V**	Characteristic: **gR**	Fuse-links type M are applied in fuse base (for example PK).

M00CUQ2/125A/690V



Size	In (A)	Type (visual indicator with grip for microswitch NVS 5)	Code No.	Operating I^2t-value (A^2s)	Power dissipation (W)	Char.	Packaging (pcs)	Weight (g)
00C	10	M00CUQ2/10A/690V	004721204	100	6.5	gR	3/60	140
	16	M00CUQ2/16A/690V	004721205	220	8	gR	3/60	140
	20	M00CUQ2/20A/690V	004721206	320	9.5	gR	3/60	140
	25	M00CUQ2/25A/690V	004721207	600	11.8	gR	3/60	140
	32	M00CUQ2/32A/690V	004721208	920	12.5	gR	3/60	140
	35	M00CUQ2/35A/690V	004721209	920	13.1	gR	3/60	140
	40	M00CUQ2/40A/690V	004721210	1.400	14.1	gR	3/60	140
	50	M00CUQ2/50A/690V	004721211	2.250	15.6	gR	3/60	140
	63	M00CUQ2/63A/690V	004721212	3.600	17.8	gR	3/60	140
	80	M00CUQ2/80A/690V	004721213	6.200	20.6	gR	3/60	140
	100	M00CUQ2/100A/690V	004721214	10.000	23.7	gR	3/60	140
	125	M00CUQ2/125A/690V	004721215	13.000	30	gR	3/60	140
	160	M00CUQ2/160A/690V	004721216	23.000	35.9	gR	3/60	140

Dimensions:

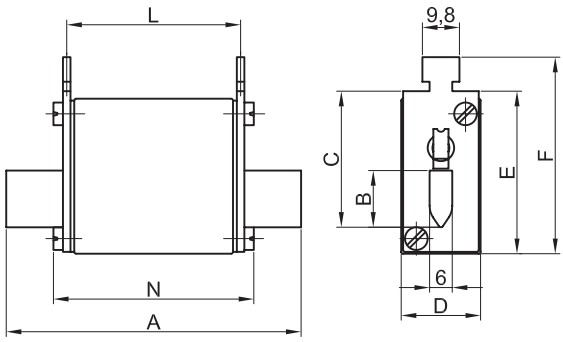

Size	A	B	C	D	E	F	L	N
00C	78	15	35	21	42	52	46	53

SERIES	TYPES	RATED VOLTAGE
UQ2	**M**	**~690V**

Technical data:			Application:
Standards: **DIN 43620** **VDE 0636-201**	Breaking capacity: **~200kA** Rated voltage: **~690V**	Characteristic: **gR**	Fuse-links type M are applied in fuse base (for example PK).

Size	In (A)	Type (visual indicator with grip for microswitch NVS 5)	Code No.	Operating I^2t-value (A^2s)	Power dissipation (W)	Char.	Packaging (pcs)	Weight (g)
1	35	M1UQ2/35A/690V	004723209	920	13.1	gR	3	420
	40	M1UQ2/40A/690V	004723210	1.400	14.1	gR	3	420
	50	M1UQ2/50A/690V	004723211	2.250	15.6	gR	3	420
	63	M1UQ2/63A/690V	004723212	3.600	17.8	gR	3	420
	80	M1UQ2/80A/690V	004723213	6.200	20.6	gR	3	420
	100	M1UQ2/100A/690V	004723214	10.000	23.7	gR	3	420
	125	M1UQ2/125A/690V	004723215	13.000	30	gR	3	420
	160	M1UQ2/160A/690V	004723216	23.000	35.9	gR	3	420
	200	M1UQ2/200A/690V	004723217	47.000	31.5	gR	3	420
	224	M1UQ2/224A/690V	004723218	60.000	36.8	gR	3	420
	250	M1UQ2/250A/690V	004723219	70.000	42.7	gR	3	420
2	125	M2UQ2/125A/690V	004724215	13.000	30	gR	3	660
	160	M2UQ2/160A/690V	004724216	23.000	35.9	gR	3	660
	200	M2UQ2/200A/690V	004724217	47.000	31.5	gR	3	660
	224	M2UQ2/224A/690V	004724218	60.000	36.8	gR	3	660
	250	M2UQ2/250A/690V	004724219	70.000	42.7	gR	3	660
	315	M2UQ2/315A/690V	004724221	110.000	57	gR	3	660
	350	M2UQ2/350A/690V	004724222	150.000	67	gR	3	660
	400	M2UQ2/400A/690V	004724223	170.000	76	gR	3	660
3	250	M3UQ2/250A/690V	004725219	70.000	42.7	gR	1	870
	315	M3UQ2/315A/690V	004725221	110.000	57	gR	1	870
	350	M3UQ2/350A/690V	004725222	150.000	67	gR	1	870
	400	M3UQ2/400A/690V	004725223	170.000	76	gR	1	870
	425	M3UQ2/425A/690V	004725224	200.000	84	gR	1	870
	500	M3UQ2/500A/690V	004725226	240.000	102	gR	1	870
	630	M3UQ2/630A/690V	004725228	400.000	138	gR	1	870

M2UQ2/250A/690V



Dimensions:

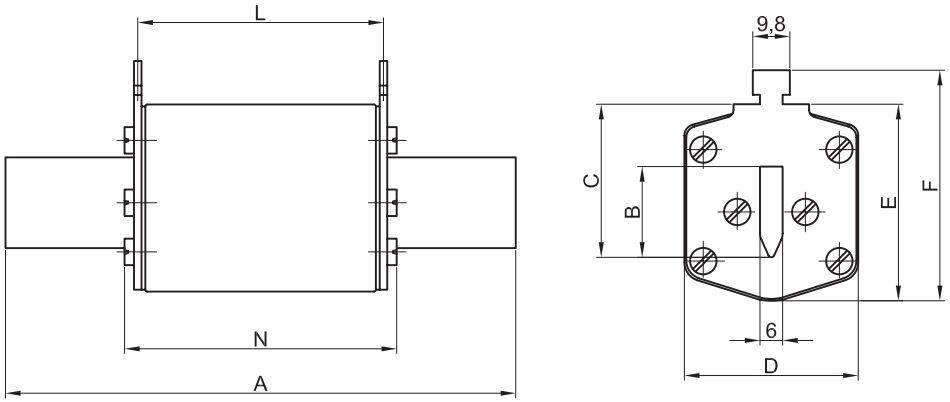

Size	A	B	C	D	E	F	L	N
1	135	24	40	46	52	62	65	73
2	150	30	48	54	61	71	65	73
3	150	37	60	64	74	84	65	73

SERIES	TYPES	RATED VOLTAGE
UQ2	**S80mm**	**~690V**

Technical data:			Application:
Standards: **DIN 43653** **IEC 60269-4-1**	Breaking capacity: **~200kA** Rated voltage: **~690V**	Characteristic: **gR**	Fuse-links type S of size 00C is applied in fuse base US00-1/80 and mounted by screws to busbars.

S00CUQ2/80/125A/690V



Size	In (A)	Type with visual indicator	Code No.	Operating I^2t-value (A^2s)	Power dissipation (W)	Char.	Packaging (pcs)	Weight (g)
00C	10	S00CUQ2/80/10A/690V	004721104	100	6.5	gR	3	140
	16	S00CUQ2/80/16A/690V	004721105	220	8	gR	3	140
	20	S00CUQ2/80/20A/690V	004721106	320	9.5	gR	3	140
	25	S00CUQ2/80/25A/690V	004721107	600	11.8	gR	3	140
	32	S00CUQ2/80/32A/690V	004721108	920	12.5	gR	3	140
	35	S00CUQ2/80/35A/690V	004721109	920	13.1	gR	3	140
	40	S00CUQ2/80/40A/690V	004721110	1.400	14.1	gR	3	140
	50	S00CUQ2/80/50A/690V	004721111	2.250	15.6	gR	3	140
	63	S00CUQ2/80/63A/690V	004721112	3.600	17.8	gR	3	140
	80	S00CUQ2/80/80A/690V	004721113	6.200	20.6	gR	3	140
	100	S00CUQ2/80/100A/690V	004721114	10.000	23.7	gR	3	140
	125	S00CUQ2/80/125A/690V	004721115	13.000	30	gR	3	140
	160	S00CUQ2/80/160A/690V	004721116	23.000	35.9	gR	3	140

Dimensions:

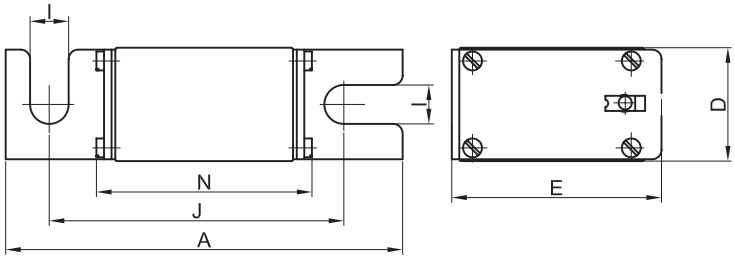

Size	A	D	E	I	J	N
00C	101	21	40	8,5	78	54

SERIES	TYPES	RATED VOLTAGE
UQ2	**S110mm**	**~690V**

Technical data:			Application:
Standards: **DIN 43653** **IEC 60269-4-1**	Breaking capacity: **~200kA** Rated voltage: **~690V**	Characteristic: **gR**	Fuse-links type S 110mm of size 1, 2, 3 are applied in universal fuse base US1..3-1/80-110 and mounted by screws to busbars.

Size	In (A)	Type with visual indicator	Code No.	Operating I^2t-value (A^2s)	Power dissipation (W)	Char.	Packaging (pcs)	Weight (g)
1	80	S1UQ2/110/80A/690V	004723113	6.200	9.5	gR	1	390
	100	S1UQ2/110/100A/690V	004723114	10.000	12.7	gR	1	390
	125	S1UQ2/110/125A/690V	004723115	13.000	17.6	gR	1	390
	160	S1UQ2/110/160A/690V	004723116	23.000	23.8	gR	1	390
	200	S1UQ2/110/200A/690V	004723117	47.000	31.5	gR	1	390
	224	S1UQ2/110/224A/690V	004723118	60.000	36.8	gR	1	390
	250	S1UQ2/110/250A/690V	004723119	70.000	42.7	gR	1	390
2	125	S2UQ2/110/125A/690V	004724115	13.000	17.6	gR	1	510
	160	S2UQ2/110/160A/690V	004724116	23.000	23.8	gR	1	510
	200	S2UQ2/110/200A/690V	004724117	47.000	31.5	gR	1	510
	224	S2UQ2/110/224A/690V	004724118	60.000	36.8	gR	1	510
	250	S2UQ2/110/250A/690V	004724119	70.000	42.7	gR	1	510
	315	S2UQ2/110/315A/690V	004724121	110.000	57	gR	1	510
	350	S2UQ2/110/350A/690V	004724122	150.000	67	gR	1	510
	400	S2UQ2/110/400A/690V	004724123	170.000	76	gR	1	510
3	250	S3UQ2/110/250A/690V	004725119	70.000	42.7	gR	1	830
	315	S3UQ2/110/315A/690V	004725121	110.000	57	gR	1	830
	350	S3UQ2/110/350A/690V	004725122	150.000	67	gR	1	830
	400	S3UQ2/110/400A/690V	004725123	170.000	76	gR	1	830
	425	S3UQ2/110/425A/690V	004725124	200.000	84	gR	1	830
	500	S3UQ2/110/500A/690V	004725126	240.000	102	gR	1	830
	630	S3UQ2/110/630A/690V	004725128	400.000	138	gR	1	830

S2UQ2/110/250A/690V



Dimensions:

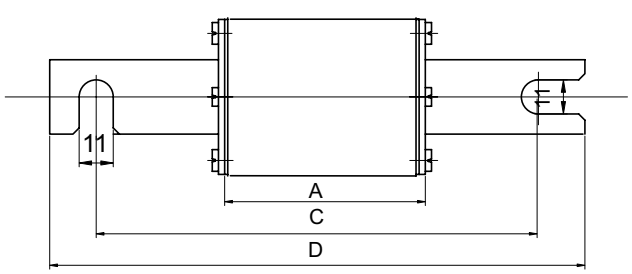

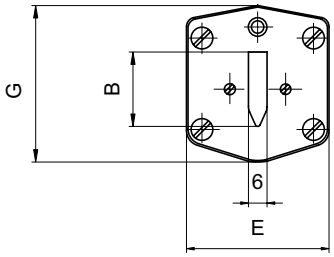

Size	A	B	C	D	E	G
1	72	24	110	140	46	51
2	72	30	110	140	54	59
3	72	37	110	140	64	70

SYSTEM **NV/NH**

SERIES	TYPES	RATED VOLTAGE
UQ2	**G**	**~690V**

Technical data:			Application:
Standards: **IEC 60269-4-1**	Breaking capacity: **~200kA** Rated voltage: **~690V**	Characteristic: **gR**	Fuse-links type G has threaded studs so fuses are mounted by special screws to busbars.

G2UQ2/250A/690V



Size	In (A)	Type with visual indicator	Code No.	Operating I^2t-value (A^2s)	Power dissipation (W)	Char.	Packaging (pcs)	Weight (g)
1	80	G1UQ2/80A/690V	004723513	6.200	9.5	gR	1	360
	100	G1UQ2/100A/690V	004723514	10.000	12.7	gR	1	360
	125	G1UQ2/125A/690V	004723515	13.000	17.6	gR	1	360
	160	G1UQ2/160A/690V	004723516	23.000	23.8	gR	1	360
	200	G1UQ2/200A/690V	004723517	47.000	31.5	gR	1	360
	224	G1UQ2/224A/690V	004723518	60.000	36.8	gR	1	360
	250	G1UQ2/250A/690V	004723519	70.000	42.7	gR	1	360
2	125	G2UQ2/125A/690V	004724515	13.000	17.6	gR	1	520
	160	G2UQ2/160A/690V	004724516	23.000	23.8	gR	1	520
	200	G2UQ2/200A/690V	004724517	47.000	31.5	gR	1	520
	224	G2UQ2/224A/690V	004724518	60.000	36.8	gR	1	520
	250	G2UQ2/250A/690V	004724519	70.000	42.7	gR	1	520
	315	G2UQ2/315A/690V	004724521	110.000	57	gR	1	520
	350	G2UQ2/350A/690V	004724522	150.000	67	gR	1	520
	400	G2UQ2/400A/690V	004724523	170.000	76	gR	1	520
3	250	G3UQ2/250A/690V	004725519	70.000	42.7	gR	1	800
	315	G3UQ2/315A/690V	004725521	110.000	57	gR	1	800
	350	G3UQ2/350A/690V	004725522	150.000	67	gR	1	800
	400	G3UQ2/400A/690V	004725523	170.000	76	gR	1	800
	425	G3UQ2/425A/690V	004725525	200.000	84	gR	1	800
	500	G3UQ2/500A/690V	004725526	240.000	102	gR	1	800
	630	G3UQ2/630A/690V	004725528	400.000	138	gR	1	800

Dimensions:

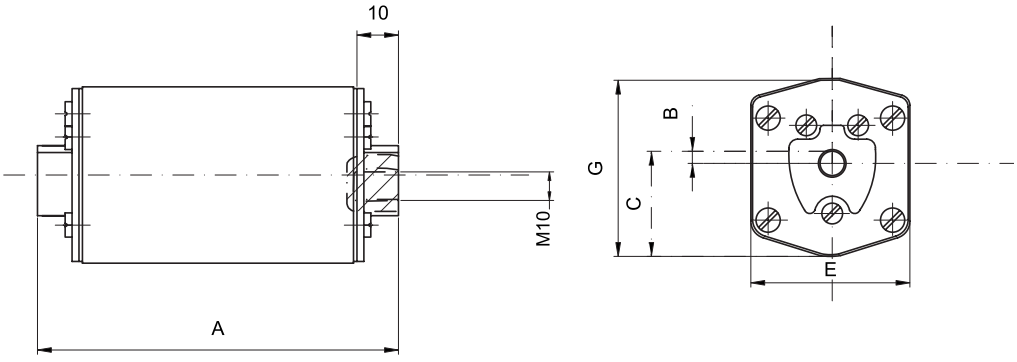

Size	A	B	C	E	G
1	85	8.5	25	46	50
2	72	2	29.5	54	59
3	83	2	34	64	70

SERIES	TYPES	RATED VOLTAGE
UQ2	**M**	**~1200V**

Technical data:			Application:
Standards: **DIN 43620** **VDE 0636-201**	Breaking capacity: **~200kA** Rated voltage: **~1200V**	Characteristic: **aR**	Fuse-links type M are applied in fuse base (for example PK).

Size	In (A)	Type (visual indicator with aRip for microswitch NVS 5)	Code No.	Operating I^2t-value (A^2s)	Power dissipation (W)	Char.	Packaging (pcs)	Weight (g)
1	80	M1UQ2/80A/1200V	004733213	8.000	35	aR	1	700
	100	M1UQ2/100A/1200V	004733214	12.500	45.9	aR	1	700
	125	M1UQ2/125A/1200V	004733215	20.000	55	aR	1	700
	160	M1UQ2/160A/1200V	004733216	32.000	67	aR	1	700
	200	M1UQ2/200A/1200V	004733217	50.000	84	aR	1	700
	224	M1UQ2/224A/1200V	004733218	63.000	93	aR	1	700
	250	M1UQ2/250A/1200V	004733219	80.000	104	aR	1	700
2	315	M2UQ2/315A/1200V	004734221	120.000	125	aR	1	1050
	350	M2UQ2/350A/1200V	004734222	160.000	141	aR	1	1050
	400	M2UQ2/400A/1200V	004734223	200.000	159	aR	1	1050
3	425	M3UQ2/425A/1200V	004734224	230.000	172	aR	1	1360
	500	M3UQ2/500A/1200V	004734226	320.000	185	aR	1	1360
	630	M3UQ2/630A/1200V	004734228	500.000	198	aR	1	1360

M3UQ2/630A/1200V



Dimensions:

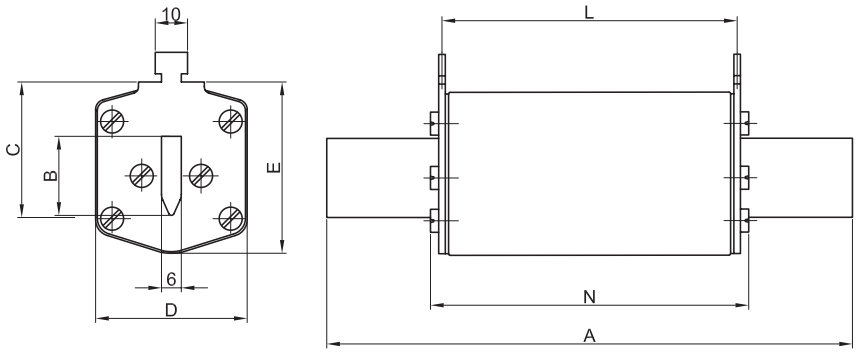

Size	A	B	C	D	E	L	N
1	194	20/24*	40	46	61.5	124	132
2	209	26/30*	48	54	71	124	132
3	209	32/37*	60	64	82	124	132

* The width of the knife is grated in dependence of rating.

SYSTEM **NV/NH**

SERIES	TYPES	RATED VOLTAGE
UQ2	**S170mm**	**~1200V**

Technical data:			Application:
Standards: **DIN 43653** **IEC 60269-4-1**	Breaking capacity: **~200kA** Rated voltage: **~1200V**	Characteristic: **aR**	Fuse-links type S 170mm of size 1, 2, 3 are mounted by screws to busbars.

S1UQ2/170/200A/1200V



Size	In (A)	Type with visual indicator	Code No.	Operating I^2t-value (A^2s)	Power dissipation (W)	Char.	Packaging (pcs)	Weight (g)
1	80	S1UQ2/170/80A/1200V	004733113	8.000	35	aR	1	770
	100	S1UQ2/170/100A/1200V	004733114	12.500	45.9	aR	1	770
	125	S1UQ2/170/125A/1200V	004733115	20.000	55	aR	1	770
	160	S1UQ2/170/160A/1200V	004733116	32.000	67	aR	1	770
	200	S1UQ2/170/200A/1200V	004733117	50.000	84	aR	1	770
	224	S1UQ2/170/224A/1200V	004733118	63.000	93	aR	1	770
	250	S1UQ2/170/250A/1200V	004733119	80.000	104	aR	1	770
2	315	S2UQ2/170/315A/1200V	004734121	120.000	125	aR	1	1060
	350	S2UQ2/170/350A/1200V	004734122	160.000	141	aR	1	1060
	400	S2UQ2/170/400A/1200V	004734123	200.000	159	aR	1	1060
3	425	S3UQ2/170/425A/1200V	004735124	230.000	172	aR	1	1380
	500	S3UQ2/170/500A/1200V	004735126	320.000	185	aR	1	1380
	630	S3UQ2/170/630A/1200V	004735128	500.000	198	aR	1	1380

Dimensions:

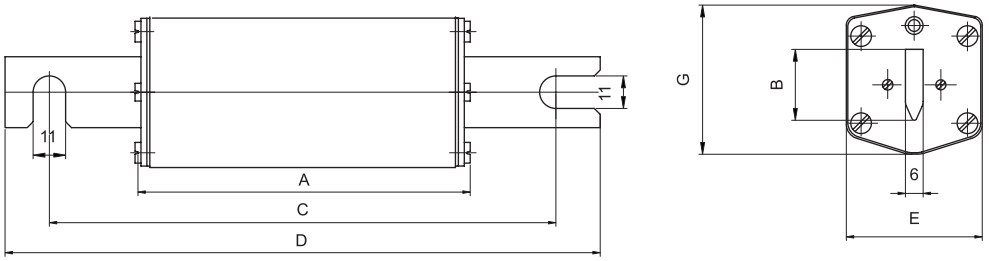

Size	A	B	C	D	E	G
1	132	25	170	200	46	50
2	132	30	170	200	54	59
3	132	37	170	200	64	70

SERIES	TYPES	RATED VOLTAGE
UQ2	**G**	**~1200V**

Technical data:			Application:
Standards: **IEC 60269-4-1**	Breaking capacity: **~200kA** Rated voltage: **~1200V**	Characteristic: **aR**	Fuse-links type G has threaded studs so fuses are mounted by special screws to busbars.

Size	In (A)	Type with visual indicator	Code No.	Operating I^2t-value (A^2s)	Power dissipation (W)	Char.	Packaging (pcs)	Weight (g)
1	80	G1UQ2/80A/1200V	004733513	8.000	35	aR	1	750
	100	G1UQ2/100A/1200V	004733514	12.500	45.9	aR	1	750
	125	G1UQ2/125A/1200V	004733515	20.000	55	aR	1	750
	160	G1UQ2/160A/1200V	004733516	32.000	67	aR	1	750
	200	G1UQ2/200A/1200V	004733517	50.000	84	aR	1	750
	224	G1UQ2/224A/1200V	004733518	63.000	93	aR	1	750
	250	G1UQ2/250A/1200V	004733519	80.000	104	aR	1	750
2	315	G2UQ2/315A/1200V	004734521	120.000	125	aR	1	1050
	350	G2UQ2/350A/1200V	004734522	160.000	141	aR	1	1050
	400	G2UQ2/400A/1200V	004734523	200.000	159	aR	1	1050
3	425	G3UQ2/425A/1200V	004735524	230.000	172	aR	1	1350
	500	G3UQ2/500A/1200V	004735526	320.000	185	aR	1	1350
	630	G3UQ2/630A/1200V	004735528	500.000	198	aR	1	1350

G1UQ2/200A/1200V



Dimensions:

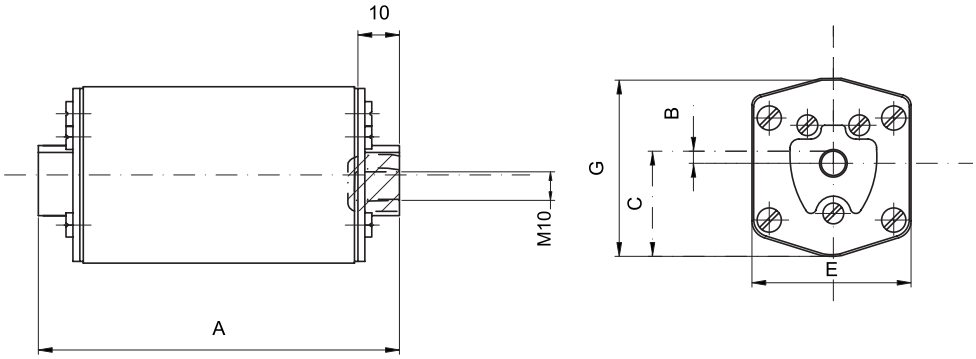

Size	A	B	C	E	G
1	155	8.5	25	46	50
2	142	2	29.5	54	59
3	142	2	34	64	70

ACCESSORIES

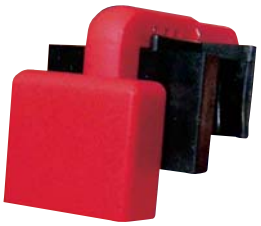

Microswitch NVS 5

Technical data:	Application:
Rated current: **~5A** Rated voltage: **~125V - ~250 V**	Microswitch NVS-5 is mounted on fuse-links Type M.

In (A)	Type	Code No.	Packaging (pcs)	Weight (g)
5	NVS 5	004349004	10/340	11.5

Microswitch MK

Technical data:	Application:
Rated current: **~6A** Rated voltage: **~250 V**	Microswitch MK is mounted on fuse-links type S-M and G-M.

Microswitch MK	Adapter AMK1 for fuses ~690V	Adapter AMK2 for fuses ~1000V
 Pic.05	 Pic.06	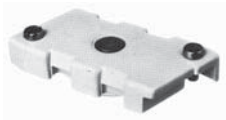 Pic.07

In (A)	Type	Code No.	Packaging (pcs)	Weight (g)
5	MK	004349003	1/1	10g
-	AMK1	004349001	1/1	15g
-	AMK2	004349002	1/1	23g

Microswitch MK + adapter AMK1 are mounted to the fuse type S-M and G-M/ 690V.

Microswitch MK + adapter AMK2 are mounted to the fuse S-M and G-M/ 1000V.

Fuse base US

Technical data:			Application:
Rated voltage: **~690V, ~1000V**	**US00** Rated current: **~160A , ~690V** **~125A , ~1000V**	**US1..3** Rated current: **~710A, ~690V** **~500A, ~1000V**	Fuse bases are designed for mounting fuse-links Ultra Quick type S.

Type	Code No.	Packaging (pcs)	Weight (g)
US00-1/80	004349005	1/1	185g
US1..3-1/80-110	004349006	1/1	950g

