X-COM®-SYSTEM
Male Headers and Male Connectors, 769 Series

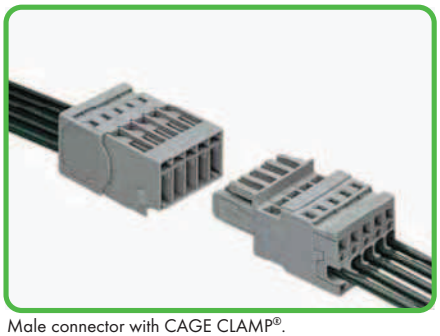

Male connector with CAGE CLAMP®.
1-conductor female plug, straight.

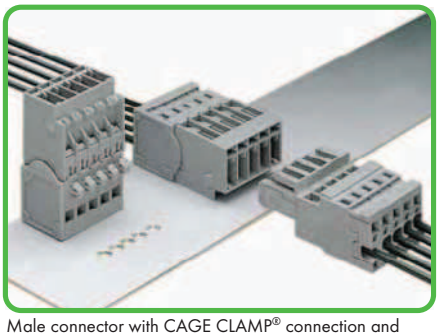

Male connector with CAGE CLAMP® connection and mounting feet.
1-conductor female plug, straight.

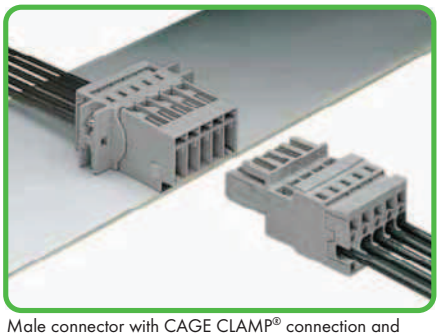

Male connector with CAGE CLAMP® connection and fixing flanges.
1-conductor female plug, straight.

Male connector with snap-in flanges

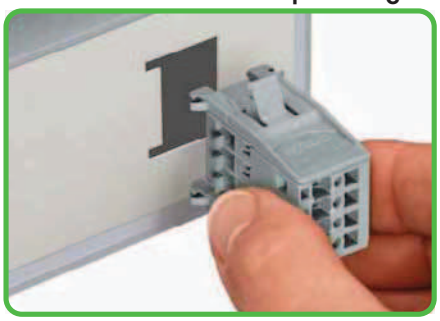





Snap-in mounting without tools.

Operating tool

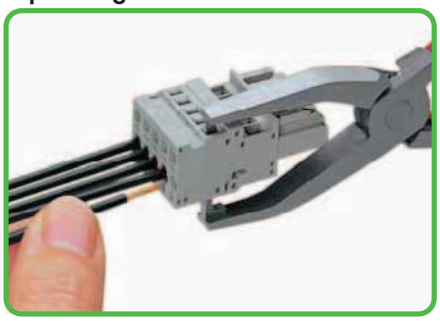

Conductor termination – side-entry wiring (example shows a female plug).

Strain relief plates

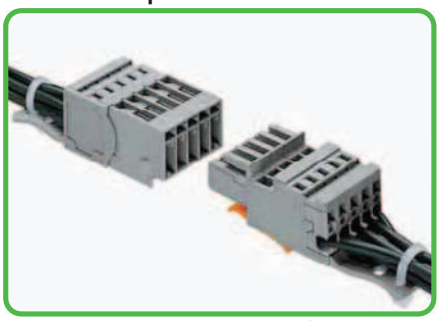

Can be snapped in male connector and female plug.

Operating tool

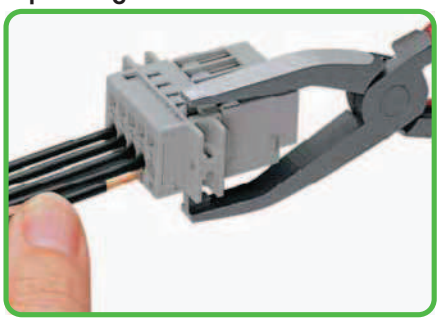

Conductor termination with operating tool (example shows a male connector).

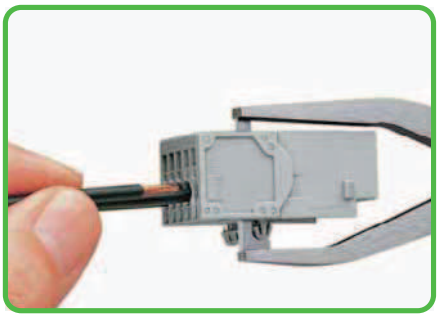

Can also be used with male connectors with snap-in mounting feet.

Marking



Female connector with CAGE CLAMP®.
with miniature WSB quick marking system



CAGE CLAMP® clamps the following copper conductors:*

solid



stranded



fine-stranded, also with tinned single strands

* For aluminum conductors, see notes in Section 14.

– Description and Handling –

Coding

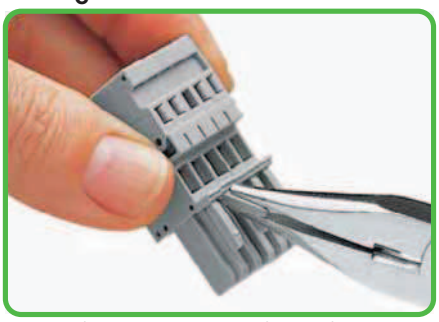

Coding a female plug – removal of coding finger(s). Do not break off the first and last latch position coding fingers!

Locking lever

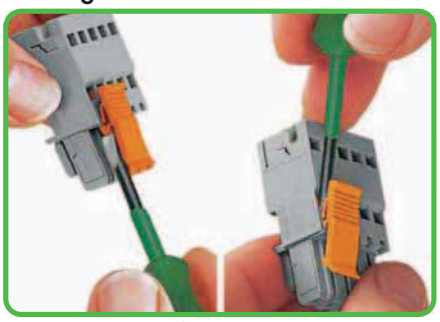

Snapping in/removal of locking lever.

Commoning

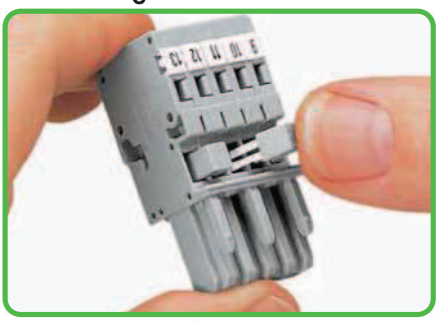

Commoning 1-conductor female plugs with miniature adjacent jumpers.

Note: Connectors used according to the regulations shall not be connected or disconnected when live or under load.

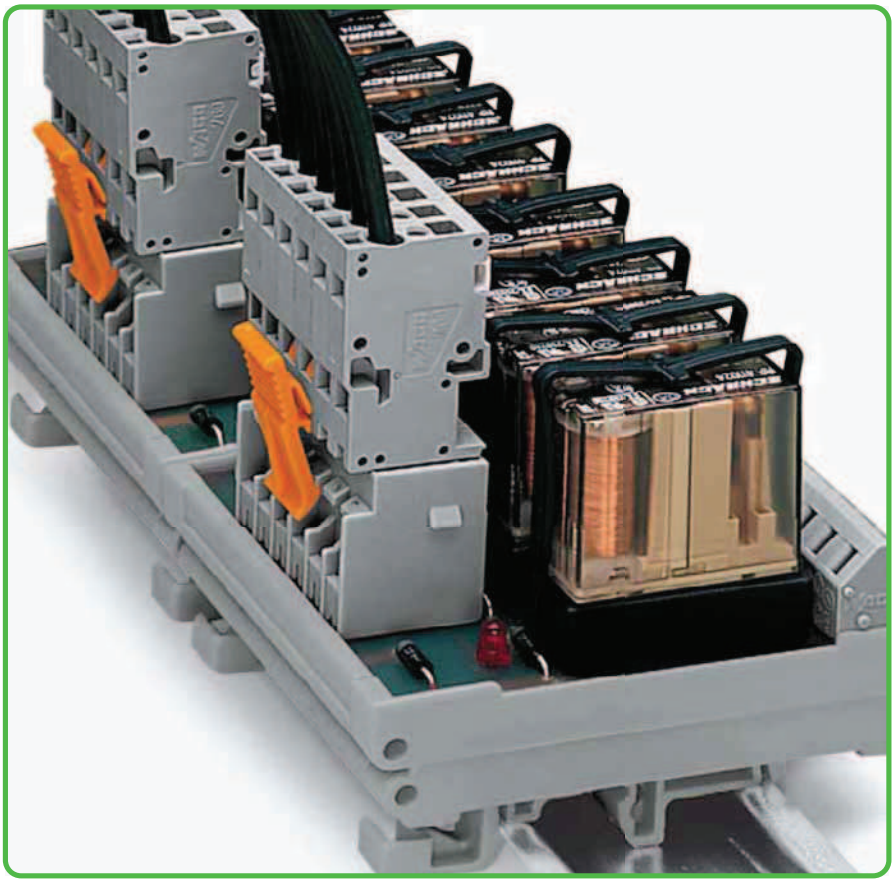

Plugging a female connector

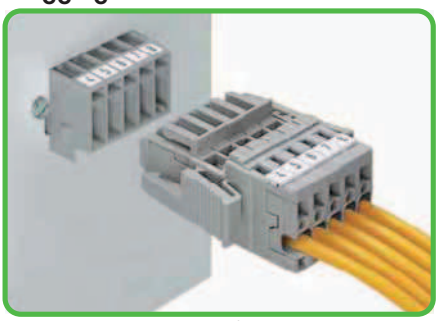

Male header and 1-conductor female plug with lateral locking levers.

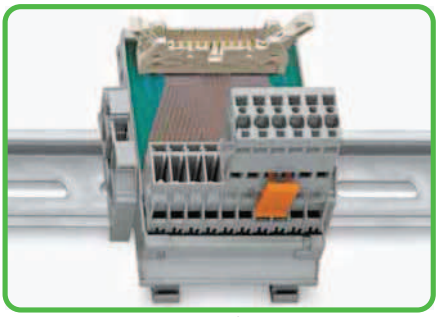

Male headers with solder pins for printed circuit boards.

Pluggable PCB connection

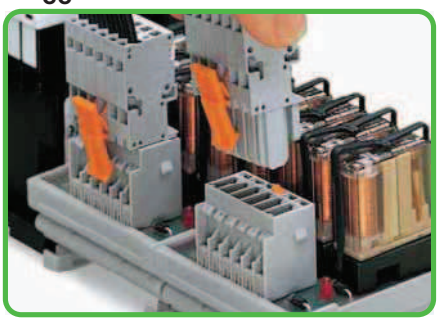

Connection to a relay module inside the switchgear cabinet.

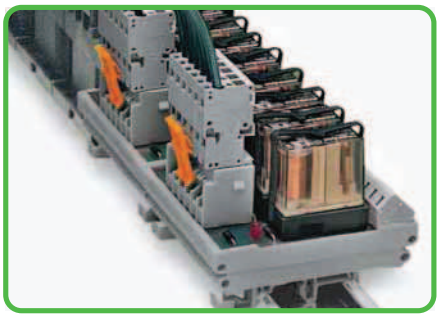

Application example showing a relay module:
Male headers with straight solder pins and 1-conductor female plugs.



Male headers with solder pins:
Integration of PCB sub-assemblies into the system wiring.



fine-stranded, tip-bonded



fine-stranded, with ferrule ❶ (gastight crimped)



fine-stranded, with pin terminal (gastight crimped)

❶ When using ferrules, the max. conductor cross section accommodated is one size smaller than max. rating of terminal block.

X-COM®-SYSTEM
Male Connectors
Pin Spacing 5 mm

Pin spacing 5 mm / 0.197 in, gray		Pin spacing 5 mm / 0.197 in, gray		Pin spacing 5 mm / 0.197 in, gray	
0.08 - 4 mm²	AWG 28 - 12	0.08 - 4 mm²	AWG 28 - 12	0.08 - 4 mm²	AWG 28 - 12
500 V/6 kV/3 ❶	300 V, 20 A	500 V/6 kV/3 ❶	600 V, 20 A	500 V/6 kV/3 ❶	300 V, 20 A
I_N 32 A ❷	300 V, 20 A	I_N 32 A ❷	300 V, 20 A	I_N 32 A ❷	300 V, 20 A
8 - 9 mm / 0.33 in ❸		8 - 9 mm / 0.33 in ❸		8 - 9 mm / 0.33 in ❸	







Pole No.	Item No.	Pack. Unit
Male connector with CAGE CLAMP® for flying leads, gray		
2	**769-602**	100
3	**769-603**	100
4	**769-604**	100
5	**769-605**	50
6	**769-606**	50
7	**769-607**	25
8	**769-608**	25
9	**769-609**	25
10	**769-610**	25
11	**769-611**	25
12	**769-612**	25
13	**769-613**	25
14	**769-614**	15
15	**769-615**	10

Pole No.	Item No.	Pack. Unit
Male connector with CAGE CLAMP® and snap-in mounting feet, for plate thickness 0.6-1.2 mm, fixing hole 3.5 mm Ø, with 209-137 mounting adapter for DIN 35 rail, gray		
2	**769-602/001-000**	100
3	**769-603/001-000**	100
4	**769-604/001-000**	50
5	**769-605/001-000**	50
6	**769-606/001-000**	50
7	**769-607/001-000**	25
8	**769-608/001-000**	25
9	**769-609/001-000**	25
10	**769-610/001-000**	25
11	**769-611/001-000**	25
12	**769-612/001-000**	25
13	**769-613/001-000**	15
14	**769-614/001-000**	15
15	**769-615/001-000**	20

Pole No.	Item No.	Pack. Unit
Male connector with CAGE CLAMP® and fixing flanges, for screw or similar mounting types, for vertical or horizontal mounting, gray		
2	**769-602/002-000**	100
3	**769-603/002-000**	50
4	**769-604/002-000**	50
5	**769-605/002-000**	50
6	**769-606/002-000**	50
7	**769-607/002-000**	25
8	**769-608/002-000**	25
9	**769-609/002-000**	25
10	**769-610/002-000**	25
11	**769-611/002-000**	25
12	**769-612/002-000**	25
13	**769-613/002-000**	15
14	**769-614/002-000**	10
15	**769-615/002-000**	20

Item-Specific Accessories

Strain relief plate,



gray		
2- to 3-pole	**769-411**	100 (4x25)
4- to 5-pole	**769-412**	100 (4x25)
6- to 9-pole	**769-413**	100 (4x25)
10- to 15-pole	**769-414**	100 (4x25)

Item-Specific Accessories

Mounting adapter, for DIN 35 rail,



can be used as end plate, 6.5 mm wide, gray **209-137** 25

Item-Specific Accessories

Fixing screw M 2.5 x 16,



and hexagon nut M 2.5 **769-499** 100 (4x25)

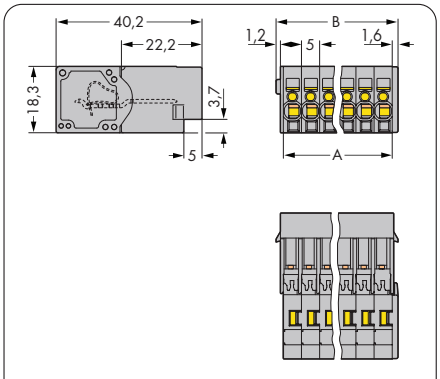

B = A + 3.6 mm
A = No. of poles x pin spacing

Dimensions in mm

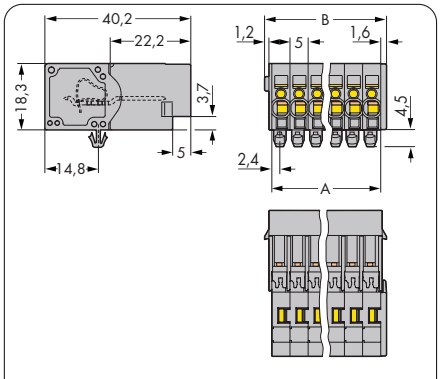

B = A + 3.6 mm
A = No. of poles x pin spacing

Dimensions in mm

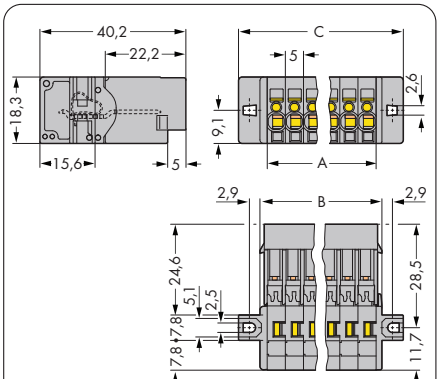

C = A + 15,4 mm
B = A + 3,6 mm
A = No. of poles x pin

Dimensions in mm

For list of approvals and user guide, see pages 634 to 637.

Pin spacing 5 mm / 0.197 in, gray	
0.08 - 4 mm²	**AWG 28 - 12**
500 V/6 kV/3 ❶	**300 V, 20 A**
I_N 32 A ❷	**300 V, 20 A**
8 - 9 mm / 0.33 in ❸	



❶ 500 V = rated voltage
6 kV = rated surge voltage
3 = pollution degree
(also see Section 14)

❷ See current-carrying capacity curve, page 379 and at www.wago.com

❸ Strip length, see packaging or instructions.

Pole No.	Item No.	Pack. Unit
Male connector with CAGE CLAMP® and feedthrough flanges,		
for screw or similar mounting types,		
for vertical or horizontal mounting,		
gray		
2	**769-602/004-000**	100
3	**769-603/004-000**	50
4	**769-604/004-000**	25
5	**769-605/004-000**	25
6	**769-606/004-000**	25
7	**769-607/004-000**	25
8	**769-608/004-000**	25
9	**769-609/004-000**	25
10	**769-610/004-000**	25
11	**769-611/004-000**	25
12	**769-612/004-000**	15
13	**769-613/004-000**	15
14	**769-614/004-000**	10
15	**769-615/004-000**	10

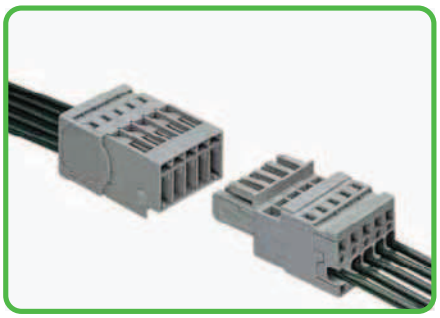

Male connector with CAGE CLAMP®.
1-conductor female plug, straight.

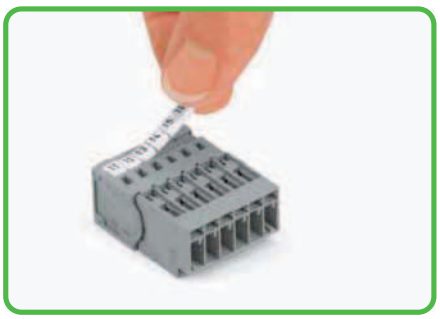

Male connector with CAGE CLAMP®.
with miniature WSB quick marking system

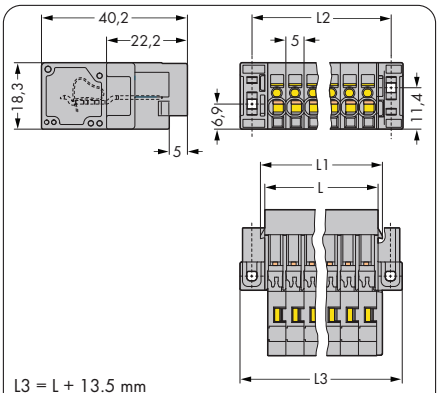

L3 = L + 13.5 mm
L2 = L + 7 mm
L1 = L + 2.4 mm
L = (No. of poles - 1) x pin spacing + 6.2 mm

Dimensions in mm

769 Series Accessories

Appropriate marking system:
Miniature WSB (see Section 13)

1-conductor female plug,			
	straight		
	gray	**769-102**	100
1-conductor female plug,			
	with lateral locking levers		
	gray	**769-102/021-000**	50
2-conductor female plug			
	gray	**769-122**	50
Coding pin,			
	for coding female plugs		
	orange	**769-435**	100 (4x25)
Operating tool,			
	for female and male connectors with CAGE CLAMP®		
		210-490	1
Miniature WSB Quick marking system,			
	10 strips with 10 markers per card, 5 mm wide markers		
	plain	**248-501**	5
Operating lever, loose,			
	for female plugs and male connectors with CAGE CLAMP®		
		769-434	2000 (20x100)

X-COM®-SYSTEM
Male Connectors with Snap-In Flanges
Pin Spacing 5 mm/0.197 in

CAGE CLAMP®

Pin spacing 5 mm / 0.197 in, gray

0.08 - 4 mm²	AWG 28 - 12
500 V/6 kV/3 ❶	300 V, 20 A
I_N 32 A ❷	300 V, 20 A
8 - 9 mm / 0.33 in ❸	



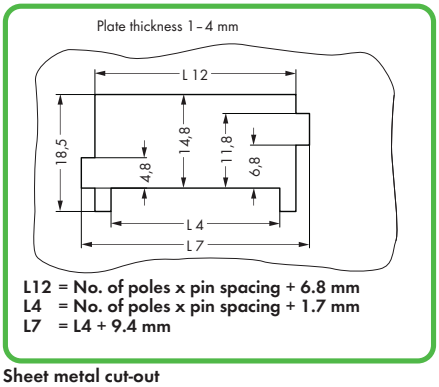

L12 = No. of poles x pin spacing + 6.8 mm
L4 = No. of poles x pin spacing + 1.7 mm
L7 = L4 + 9.4 mm

Sheet metal cut-out
Male connectors with CAGE CLAMP® connection and snap-in flanges

❶ 500 V = rated voltage
6 kV = rated surge voltage
3 = pollution degree
(also see Section 14)

❷ See current-carrying capacity curve, page 379 and at www.wago.com

❸ Strip length, see packaging or instructions.

Pole No.	Item No.	Pack. Unit
Male connector with CAGE CLAMP® and snap-in flanges,		
for mounting without tools,		
gray		
2	**769-602/005-000**	50
3	**769-603/005-000**	25
4	**769-604/005-000**	25
5	**769-605/005-000**	25
6	**769-606/005-000**	25
7	**769-607/005-000**	25
8	**769-608/005-000**	20
9	**769-609/005-000**	20
10	**769-610/005-000**	20
11	**769-611/005-000**	15
12	**769-612/005-000**	15
13	**769-613/005-000**	15
14	**769-614/005-000**	10
15	**769-615/005-000**	10



Insert male connector into sheet metal cut-out.



Snap-in mounting without tools.

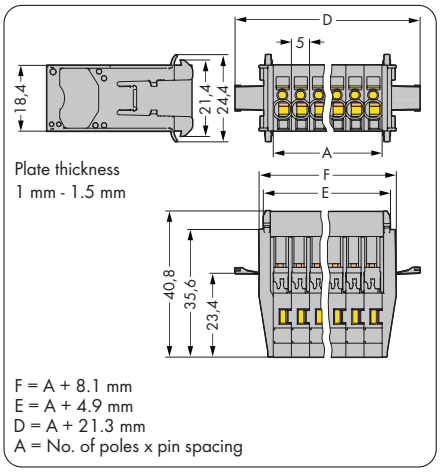

F = A + 8.1 mm
E = A + 4.9 mm
D = A + 21.3 mm
A = No. of poles x pin spacing

Dimensions in mm

769 Series Accessories

Appropriate marking system:
Miniature WSB (see Section 13)

1-conductor female plug,



straight
gray **769-102** 100

1-conductor female plug,



with lateral locking levers
gray **769-102/021-000** 50

2-conductor female plug



gray **769-122** 50

Coding pin,



for coding female plugs
orange **769-435** 100 (4x25)

Operating tool,



for female and male connectors with CAGE CLAMP®
210-490 1

Miniature WSB Quick marking system,



10 strips with 10 markers per card,
5 mm wide markers
plain **248-501** 5

Operating lever, loose,



for female plugs and male connectors with CAGE CLAMP®
769-434 2000 (20x100)

For list of approvals and user guide, see pages 634 to 637.

X-COM®-SYSTEM
Male Connectors with Snap-In Flanges
Pin Spacing 5 mm/0.197 in

Pin spacing 5 mm / 0.197 in, gray
0.08 - 4 mm² | AWG 28 - 12
500 V/6 kV/3
I_N 32 A



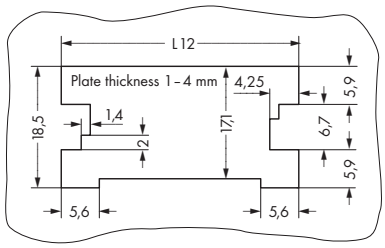

L12 = No. of poles x pin spacing + 10.2 mm

Sheet metal cut-out (for female plugs without locking levers)
Male connectors with CAGE CLAMP® connection and snap-in flanges

1. 500 V = rated voltage
   6 kV = rated surge voltage
   3 = pollution degree
   (see Section 14)
2. See current-carrying capacity curve at www.wago.com
3. Strip length, see packaging or instructions.

Pole No.	Item No.	Pack. Unit
Male connector with CAGE CLAMP® and snap-in flanges,		
for mounting without tools,		
gray		
2	**769-602/006-000**	100
3	**769-603/006-000**	100
4	**769-604/006-000**	50
5	**769-605/006-000**	25
6	**769-606/006-000**	25
7	**769-607/006-000**	25
8	**769-608/006-000**	25
9	**769-609/006-000**	20
10	**769-610/006-000**	25
11	**769-611/006-000**	25
12	**769-612/006-000**	25
13	**769-613/006-000**	15
14	**769-614/006-000**	15
15	**769-615/006-000**	10

Accessories see page 362.



Insert male connector into sheet metal cut-out.



Fix snap-in flange.



For removal, insert operating tool (blade width 2.5 mm) into release slot.

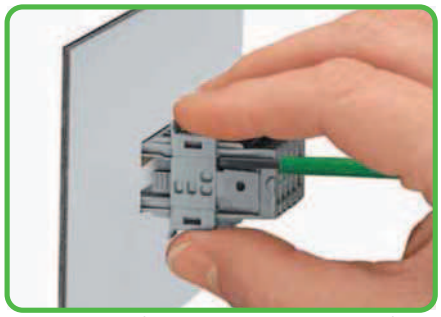

Press center part of connector. Then remove snap-in flange.

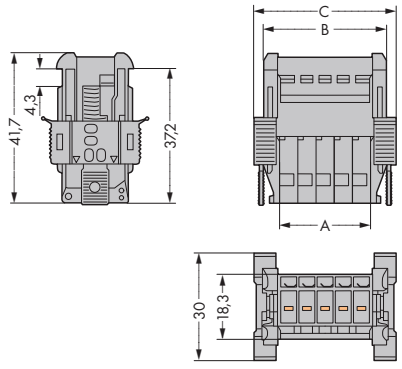

C = A + 14.3 mm
B = A + 9.3 mm
A = No. of poles x pin spacing

Dimensions in mm

For list of approvals and user guide, see pages 634 to 637.

X-COM®-SYSTEM
Male Headers with Solder Pins
Pin Spacing 5 mm

Pin spacing 5 mm / 0.197 in, gray	Pin spacing 5 mm / 0.197 in, gray
250 V/4 kV/3 ❶ | 600 V, 20 A	250 V/4 kV/3 ❶ | 600 V, 20 A
500 V/4 kV/2 ❶ | 300 V, 20 A	500 V/4 kV/2 ❶ | 300 V, 20 A
I_N 32 A ❷	I_N 32 A ❷





❶ 250 V/500 V = rated voltage
4 kV = rated surge voltage
3/2 = pollution degree
(also see Section 14)

❷ See current-carrying capacity curve, page 378 and at www.wago.com

Pole No.	Item No.	Pack. Unit
Male header with straight solder pins, 1 x 1 mm, gray		
2	**769-632**	200
3	**769-633**	100
4	**769-634**	50
5	**769-635**	50
6	**769-636**	50
7	**769-637**	50
8	**769-638**	25
9	**769-639**	25
10	**769-640**	25
11	**769-641**	25
12	**769-642**	25
13	**769-643**	25
14	**769-644**	25
15	**769-645**	25

Pole No.	Item No.	Pack. Unit
Male header with angled solder pins, 1 x 1 mm, gray		
2	**769-662**	200
3	**769-663**	100
4	**769-664**	50
5	**769-665**	50
6	**769-666**	50
7	**769-667**	50
8	**769-668**	25
9	**769-669**	25
10	**769-670**	25
11	**769-671**	25
12	**769-672**	25
13	**769-673**	25
14	**769-674**	25
15	**769-675**	25

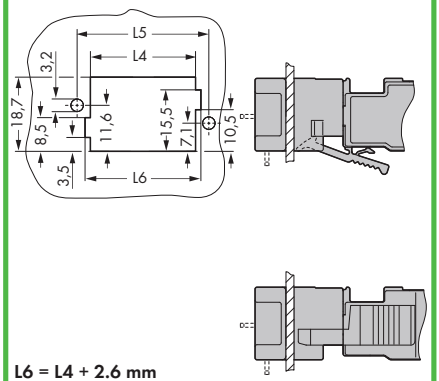

L6 = L4 + 2.6 mm
L5 = L5 + 6.6 mm
L4 = No. of poles x pin spacing + 1.7 mm

Sheet metal cut-out for male header

Accessories

1-conductor female plug,



straight

gray	**769-102**	100

1-conductor female plug,



with lateral locking levers

gray	**769-102/021-000**	50

Coding pin,



for coding female plugs

orange	**769-435**	100 (4x25)

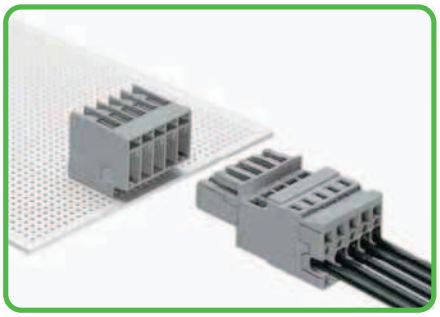

Male header with angled solder pins

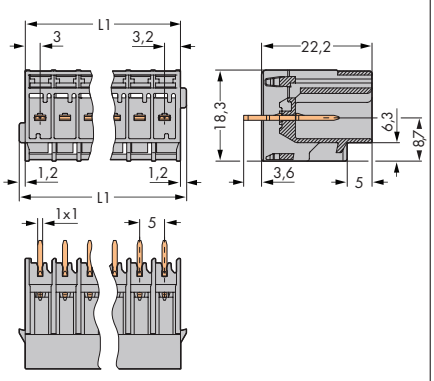

L1 = L + 2.4 mm
L = (No. of poles - 1) x pin spacing + 6.2 mm

Dimensions in mm

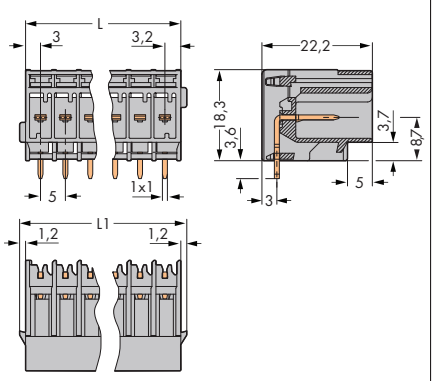

L1 = L + 2.4 mm
L = (No. of poles - 1) x pin spacing + 6.2 mm

Dimensions in mm

For list of approvals and user guide, see pages 634 to 637.

X-COM®-SYSTEM
Male Headers with Solder Pins and Fixing Flanges
Pin Spacing 5 mm

Pin spacing 5 mm / 0.197 in, gray	Pin spacing 5 mm / 0.197 in, gray
250 V/4 kV/3 ❶ | 600 V, 20 A	250 V/4 kV/3 ❶ | 600 V, 20 A
500 V/4 kV/2 ❶ | 300 V, 20 A	500 V/4 kV/2 ❶ | 300 V, 20 A
I_N 32 A ❷	I_N 32 A ❷





❶ 250 V/500 V = rated voltage
4 kV = rated surge voltage
3/2 = pollution degree
(also see Section 14)

❷ See current-carrying capacity curve, page 378 and at www.wago.com

Pole No.	Item No.	Pack. Unit
Male header with straight solder pins and fixing flanges, 1 x 1 mm, gray		
2	**769-632/003-000**	200
3	**769-633/003-000**	100
4	**769-634/003-000**	50
5	**769-635/003-000**	50
6	**769-636/003-000**	25
7	**769-637/003-000**	25
8	**769-638/003-000**	25
9	**769-639/003-000**	25
10	**769-640/003-000**	25
11	**769-641/003-000**	25
12	**769-642/003-000**	25
13	**769-643/003-000**	15
14	**769-644/003-000**	15
15	**769-645/003-000**	15

Pole No.	Item No.	Pack. Unit
Male header with angled solder pins and fixing flanges, 1 x 1 mm, gray		
2	**769-662/003-000**	100
3	**769-663/003-000**	100
4	**769-664/003-000**	50
5	**769-665/003-000**	50
6	**769-666/003-000**	50
7	**769-667/003-000**	25
8	**769-668/003-000**	25
9	**769-669/003-000**	25
10	**769-670/003-000**	25
11	**769-671/003-000**	25
12	**769-672/003-000**	25
13	**769-673/003-000**	15
14	**769-674/003-000**	15
15	**769-675/003-000**	15

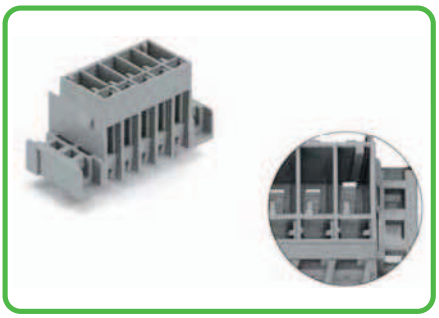

Male headers with preceding ground contact, with straight solder pins and fixing flanges
769-632/003-036
769-633/003-036
769-634/003-036
769-635/003-036
769-636/003-036

Accessories

1-conductor female plug,



straight
gray **769-102** 100

1-conductor female plug,



with lateral locking levers
gray **769-102/021-000** 50

Coding pin,



for coding female plugs
orange **769-435** 100 (4x25)

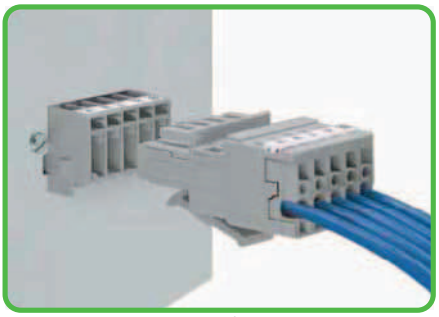

Male header and 1-conductor female plug with locking levers

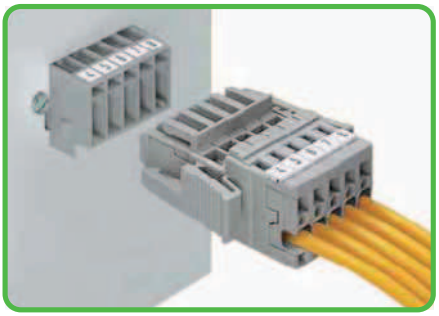

Male header and 1-conductor female plug with **lateral** locking levers

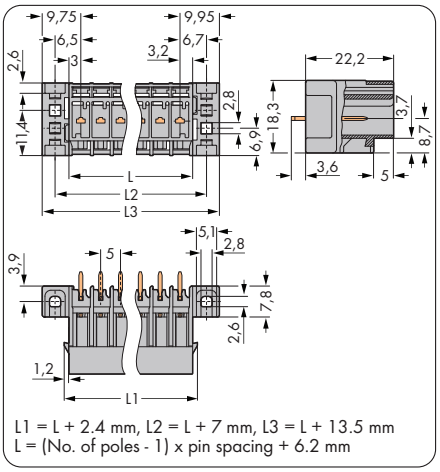

L1 = L + 2.4 mm, L2 = L + 7 mm, L3 = L + 13.5 mm
L = (No. of poles - 1) x pin spacing + 6.2 mm

Dimensions in mm

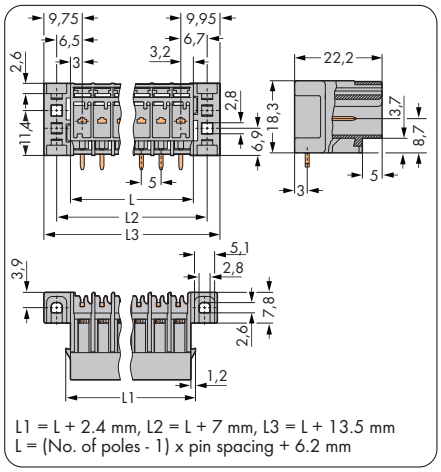

L1 = L + 2.4 mm, L2 = L + 7 mm, L3 = L + 13.5 mm
L = (No. of poles - 1) x pin spacing + 6.2 mm

Dimensions in mm

For list of approvals and user guide, see pages 634 to 637.

X-COM®-SYSTEM
Male Headers with Solder Pins and Feedthrough Flanges
Pin Spacing 5 mm

Pin spacing 5 mm / 0.197 in, gray	Pin spacing 5 mm / 0.197 in, gray
250 V/4 kV/3 ❶ | 300 V, 20 A	250 V/4 kV/3 ❶ | 300 V, 20 A
500 V/4 kV/2 ❶ | 300 V, 20 A	500 V/4 kV/2 ❶ | 300 V, 20 A
I_N 32 A ❷	I_N 32 A ❷





❶ 250 V/500 V = rated voltage
4 kV = rated surge voltage
3/2 = pollution degree
(also see Section 14)

❷ See current-carrying capacity curve, page 378 and at www.wago.com

Pole No.	Item No.	Pack. Unit
Male header with straight solder pins and feedthrough flanges, 1 x 1 mm, gray		
2	**769-632/004-000**	200
3	**769-633/004-000**	50
4	**769-634/004-000**	50
5	**769-635/004-000**	50
6	**769-636/004-000**	50
7	**769-637/004-000**	25
8	**769-638/004-000**	25
9	**769-639/004-000**	25
10	**769-640/004-000**	25
11	**769-641/004-000**	25
12	**769-642/004-000**	25
13	**769-643/004-000**	15
14	**769-644/004-000**	15
15	**769-645/004-000**	15

Pole No.	Item No.	Pack. Unit
Male header with angled solder pins and feedthrough flanges, 1 x 1 mm, gray		
2	**769-662/004-000**	200
3	**769-663/004-000**	100
4	**769-664/004-000**	50
5	**769-665/004-000**	50
6	**769-666/004-000**	50
7	**769-667/004-000**	50
8	**769-668/004-000**	25
9	**769-669/004-000**	25
10	**769-670/004-000**	25
11	**769-671/004-000**	25
12	**769-672/004-000**	25
13	**769-673/004-000**	25
14	**769-674/004-000**	15
15	**769-675/004-000**	15

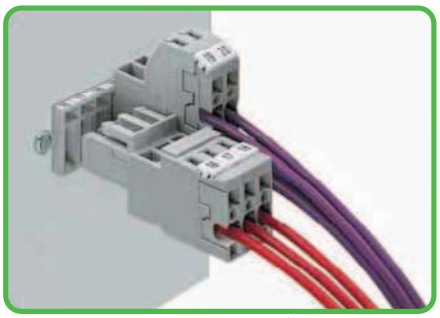

Male header and 1- and 2-conductor female plugs

Accessories

1-conductor female plug,



straight

gray	**769-102**	100

1-conductor female plug,



with lateral locking levers

gray	**769-102/021-000**	50

Coding pin,



for coding female plugs

orange	**769-435**	100 (4x25)

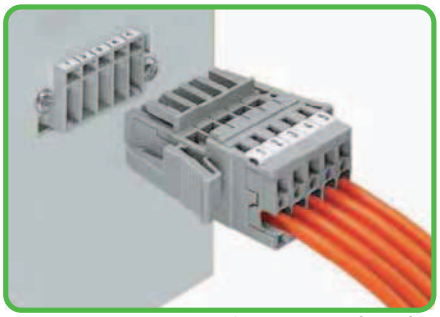

Male header and 1-conductor female plug with **lateral** locking levers

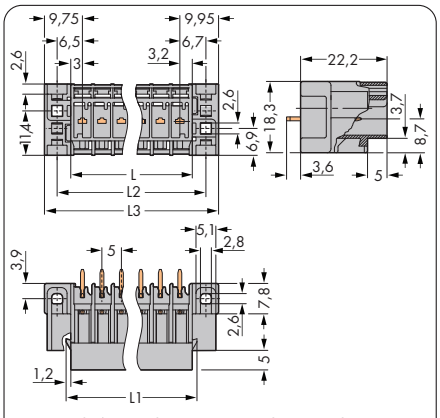

L1 = L + 2.4 mm, L2 = L + 7 mm, L3 = L + 13.5 mm
L = (No. of poles - 1) x pin spacing + 6.2 mm

Dimensions in mm

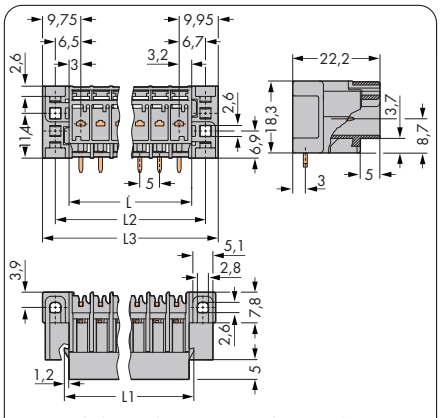

L1 = L + 2.4 mm, L2 = L + 7 mm, L3 = L + 13.5 mm
L = (pole no. - 1) x pin spacing + 6.2 mm

Dimensions in mm

For list of approvals and user guide, see pages 634 to 637.

Types of Assembly
Male Headers with Solder Pins with 1-/2-Conductor Female Plugs

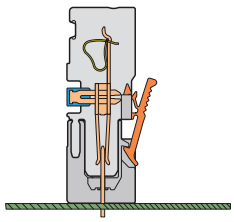

Male header with straight solder pins

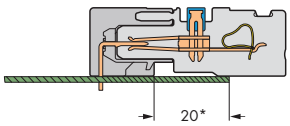

* Maximum dimension when using 1-conductor female plugs

Male header with angled solder pins

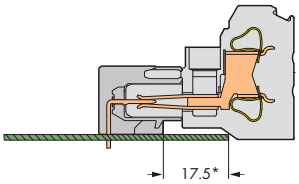

* Maximum dimension when using 2-conductor female plugs

Male header with angled solder pins

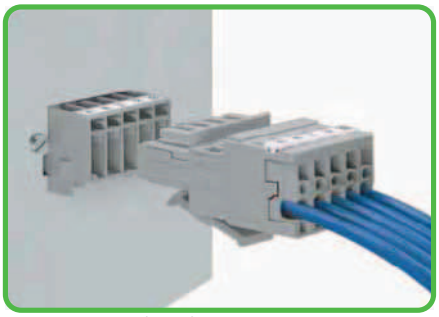

Male header with fixing flanges
1-conductor female plug with **bottom-mount** locking levers

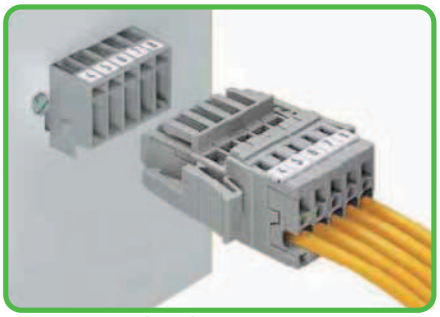

Male header with fixing flanges
1-conductor female plug with **lateral** locking levers

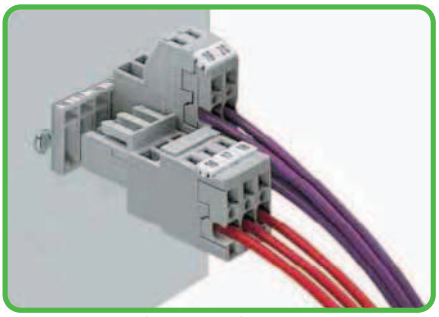

Male header with feedthrough flanges
1-conductor female plug
2-conductor female plug

Cutouts for headers with fixing flanges for feedthrough applications and locking levers

Female plugs with **bottom-mounted** locking levers

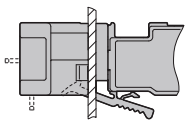

Cutouts for
2-pole locking levers
(2- to 15-pole female plugs)

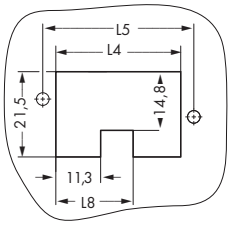

Layout for
locking levers
outer . . .

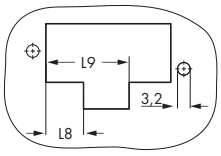

. . . inner

Cutouts for
single pole locking levers

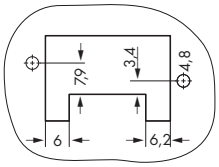

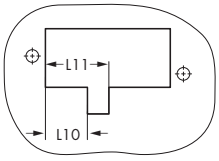

Female plug **without** locking levers

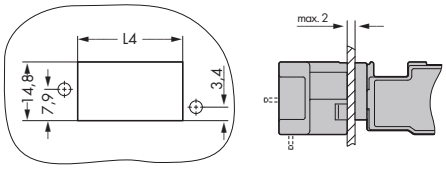

Female plug with **lateral** locking levers

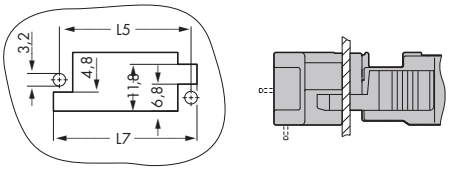

L 4 = No. of poles x pin spacing + 1.7 mm
L 5 = L4 + 6.6 mm
L 7 = L4 + 9.4 mm
L 8 = No. of poles V x pin spacing - 0.3 mm
L 9 = L8 + 11.6 mm
L10 = No. of poles V x pin spacing + 0.6 mm
L11 = L10 + 5.4 mm
No. of poles V: Number of poles before the pole with the locking lever attached

X-COM®-SYSTEM
1-Conductor Female Plugs

CAGE CLAMP®

0.08 - 4 mm²	AWG 28 - 12
500 V/6 kV/3 ❶	600 V, 20 A
I_N 32 A ❷	300 V, 20 A

module width 5 mm / 0.197 in
8 - 9 mm / 0.33 in ❸



❶ 500 V = rated voltage
6 kV = rated surge voltage
3 = pollution degree
(also see Section 14)

❷ See current-carrying capacity curve, pages 376 to 379 and at www.wago.com

❸ Strip length, see packaging or instructions.

❹ Item-no. suffix
blue . . . /000-006
green-yellow . . . /000-016

❺ **Application examples for 1-pole female plug:**
- Phase selection in three-phase network
- Test plug with rated current capability
- Simplified circuit expansion – addition of base circuits requires only female plugs to be plugged in

❻ See page 375

Pole No.	Item No.	Pack. Unit
1-conductor female plug, for insertion into carrier terminal blocks or male connectors, with coding fingers, gray, commoning possible with miniature adjacent jumpers		
1	**769-101** ❺	200
2	**769-102**	100
3	**769-103**	50
4	**769-104**	50
5	**769-105**	50
6	**769-106**	25
7	**769-107**	25
8	**769-108**	25
9	**769-109**	25
10	**769-110**	25
11	**769-111**	20
12	**769-112**	20
13	**769-113**	10
14	**769-114**	10
15	**769-115**	10

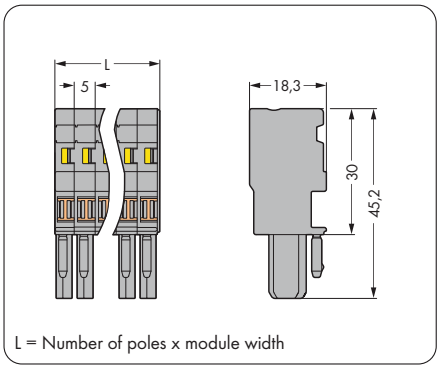

L = Number of poles x module width

Dimensions in mm

Accessories

Appropriate marking system:
Miniature WSB (see Section 13)

Insulation stop,

5 pcs/strip,
0.08 - 0.2 mm² "s" (0.14 mm² "f-st")
white **769-470** 200 (8x25)

Insulation stop,

5 pcs/strip,
0.25 - 0.5 mm²
light gray **769-471** 200 (8x25)

Insulation stop,

5 pcs/strip,
0.75 - 1 mm²
dark gray **769-472** 200 (8x25)

Miniature adjacent jumper, insulated,

I_N 24 A
gray **769-402** 100 (4x25)

Jumper cover, for 1-conductor female plugs,

for 5 poles
gray **769-436** 100 (4x25)

Protective warning marker,

with high-voltage symbol, black,
for 5 terminal blocks
yellow **280-415** 100 (4x25)

Operating lever, loose,

for female plugs and male connectors with CAGE CLAMP®
769-434 2000 (20x100)

Locking lever,

female plugs with 1-pole
gray **769-428** 100 (4x25)
orange **769-429** 100 (4x25)

Locking lever,

female plugs with 2-poles or more
orange **769-431** 100 (4x25)
gray **769-430** 100

Strain relief plate, gray

1-pole **769-410** 100 (4x25)
2- to 3-pole **769-411** 100 (4x25)
4- to 5-pole **769-412** 100 (4x25)

Strain relief plate, gray

6- to 9-pole **769-413** 100 (4x25)
10- to 15-pole **769-414** 100 (4x25)

Snap-on type relief housing,
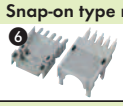
❻ consisting of strain relief support/housing
5-pole **769-1605** 25

Miniature WSB Quick marking system,

10 strips with 10 markers per card,
5 mm wide markers
plain **248-501** 5

Miniature WSB Quick marking system, plain,

10 strips with 10 markers per card,
5 mm wide markers
yellow **248-501/000-002**
red **248-501/000-005**
blue **248-501/000-006**
gray **248-501/000-007**
orange **248-501/000-012**
light green **248-501/000-017**
green **248-501/000-023**
violet **248-501/000-024**
5

For list of approvals and user guide, see pages 634 to 637.

X-COM®-SYSTEM
1-Conductor Female Plugs with Lateral Locking Levers

0.08 - 4 mm²	AWG 28 - 12
500 V/6 kV/3 ❶	300 V, 20 A
I_N 32 A ❷	300 V, 20 A

module width 5 mm / 0.197 in
8 - 9 mm / 0.33 in ❸



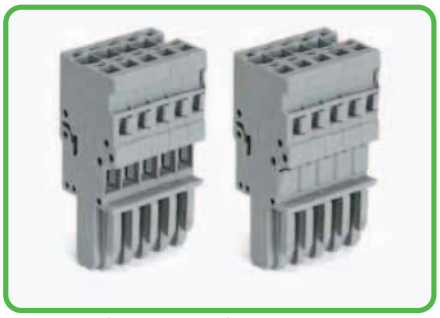
Jumper cover for 1-conductor female plugs

❶ 500 V = rated voltage
6 kV = rated surge voltage
3 = pollution degree
(also see Section 14)

❷ See current-carrying capacity curve, pages 376 to 379 and at www.wago.com

❸ Strip length, see packaging or instructions.

❹ See page 375

Pole No.	Item No.	Pack. Unit
1-conductor female plug with lateral locking levers, with coding fingers, gray, commoning possible with miniature adjacent jumpers, only to be used with male connectors		
2	**769-102/021-000**	50
3	**769-103/021-000**	25
4	**769-104/021-000**	25
5	**769-105/021-000**	25
6	**769-106/021-000**	25
7	**769-107/021-000**	25
8	**769-108/021-000**	20
9	**769-109/021-000**	20
10	**769-110/021-000**	10
11	**769-111/021-000**	10
12	**769-112/021-000**	10
13	**769-113/021-000**	10
14	**769-114/021-000**	10
15	**769-115/021-000**	10

Accessories

Appropriate marking system:
Miniature WSB (see Section 13)

Insulation stop,	5 pcs/strip, 0.08 - 0.2 mm² "s" (0.14 mm² "f-st")		
	white	**769-470**	200 (8x25)
Insulation stop,	5 pcs/strip, 0.25 - 0.5 mm²		
	light gray	**769-471**	200 (8x25)
Insulation stop,	5 pcs/strip, 0.75 - 1 mm²		
	dark gray	**769-472**	200 (8x25)
Miniature adjacent jumper, insulated,	I_N 24 A		
	gray	**769-402**	100 (4x25)
Jumper cover, for 1-conductor female plugs,	for 5 poles		
	gray	**769-436**	100 (4x25)
Protective warning marker,	with high-voltage symbol, black, for 5 terminal blocks		
	yellow	**280-415**	100 (4x25)
Operating lever, loose,	for female plugs and male connectors with CAGE CLAMP®		
		769-434	2000 (20x100)
Test plug,	with 500 mm cable, 2 mm Ø		
	red	**210-136**	50
Test plug,	with 500 mm cable, 2.3 mm Ø		
	yellow	**210-137**	50
Strain relief plate,	gray		
	2- to 3-pole	**769-411**	100 (4x25)
	4- to 5-pole	**769-412**	100 (4x25)
Strain relief plate, gray	6- to 9-pole	**769-413**	100 (4x25)
	10- to 15-pole	**769-414**	100 (4x25)
Snap-on type relief housing,	consisting of strain relief support/housing		
❹	5-pole	**769-1605**	25

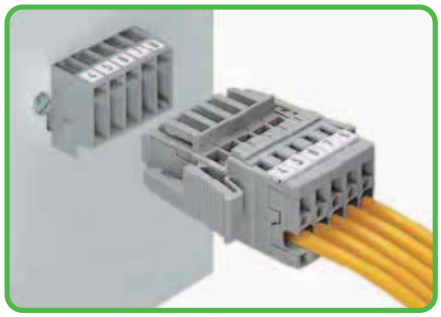
Male connector with fixing flanges and 1-conductor female plug with **lateral** locking levers

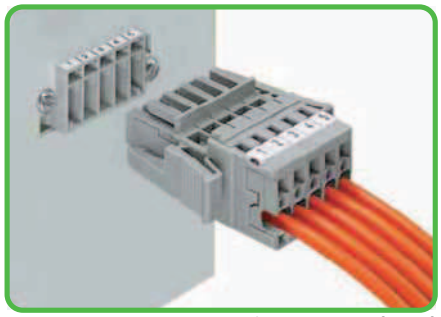
Male connector and 1-conductor female plug with **lateral** locking levers

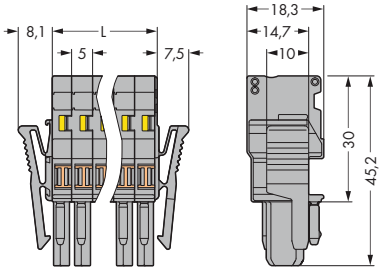

L = Number of poles x module width

Dimensions in mm

For list of approvals and user guide, see pages 634 to 637.