880 Series Features

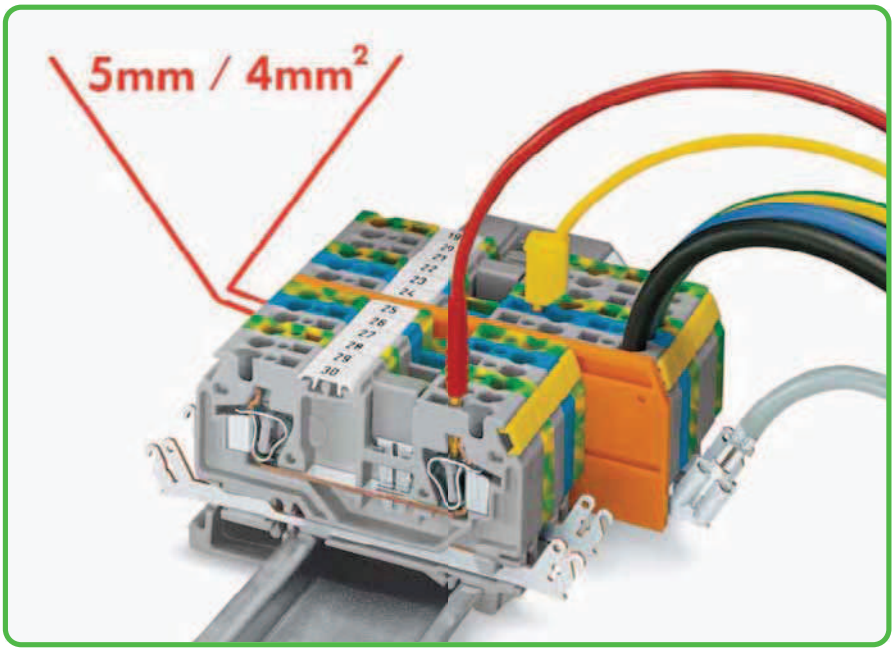

With/without shield contact

Features
- 2-, 3- and 4-conductor terminal blocks, only 5 mm/0.197 in wide
- Conductor cross section up to 4 mm² (per VDE 0281), or
  * AWG 12 with ferrule (Item No. 216-206)
  * 2.5 mm²/AWG 14 with rubber-insulated conductors having a diameter up to 4.4 mm (0.173 in)
- Shield contact, solder contact /quick-connect contact 6.3 (2 x 2.8) mm
- Test plug, red, 2 mm Ø
- Test plug, yellow, 2.3 mm Ø
- WMB marking
- Miniature WSB marking, on both sides
- Commoning with standard WAGO jumper system

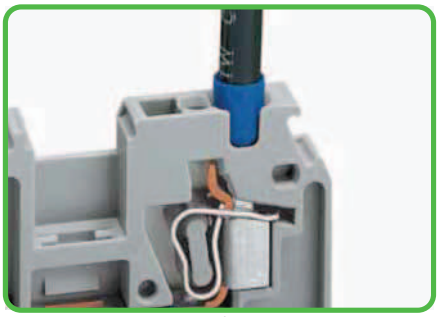

Using a AWG 12 cable with ferrule
(Item No. 216-206)

❶ 800 V = rated voltage
8 kV = rated surge voltage
3 = pollution degree
cULus 600 V/20 A
with shield contact
400 V/6 kV/3
cULus 300 V/10 A
(also see Section 14)

❷ Strip length, see packaging or instructions.

❸ Suitable for Ex i applications

❹ See application notes for:
Test plug modules, pages 194 – 196
Banana plug, page 198
Insulation stop, page 199
Comb-style jumper bar, page 200
Operating tool, page 200
Staggered jumper, page 201
Push-in type wire jumper, page 201

880 Series Accessories

Test plug,			
	with 500 mm cable, 2.3 mm Ø		
	yellow	**210-137**	50
Test plug,			
	with 500 mm cable, 2 mm Ø		
	red	**210-136**	50
Test plug adapter, 5 mm wide,			
	for terminal blocks 1.5 - 4 mm², for 210-137 test plug 2.3 mm Ø		
	gray	**280-404**	100 (4x25)
Test plug adapter, 8.3 mm wide,			
	for terminal blocks 1.5 - 10 mm², for test plug 4 mm Ø		
	gray	**209-170**	50 (2x25)
Banana plug,			
	❹ for socket 4 mm Ø, color mixed		
		215-111	50
Test plug adapter, 6 mm wide,			
	with CAGE CLAMP®, for 0.08 - 2.5 mm²		
	I_N 24 A	**281-407**	100 (4x25)
WMB Inline, plain,			
	stretchable 5 - 5.2 mm, 1,500 WMB markers, 5 mm, on roll		
	white	**2009-115**	1
WMB Multi marking system,			
	10 strips with 10 markers per card, stretchable 5 - 5.2 mm		
	plain	**793-5501**	5
Miniature WSB Quick marking system,			
	10 strips with 10 markers per card, 5 mm wide markers		
	plain	**248-501**	5
Screwless end stop,			
	for DIN 35 rail, 6 mm wide		
	gray	**249-116**	100 (4x25)
Screwless end stop,			
	for DIN 35 rail, 10 mm wide		
	gray	**249-117**	50 (2x25)

Through/Ground Conductor/Shield and Ex Terminal Blocks 4 mm²
281 Series

0.08 - 4 mm²	AWG 28 - 12	
800 V/8 kV/3 ❶	600 V, 20 A	
I_N 32 A	600 V, 25 A	
Terminal block width 6 mm / 0.236 in		
9 - 10 mm / 0.37 in ❷		

0.08 - 4 mm²	AWG 28 - 12	
800 V/8 kV/3 ❶	600 V, 20 A	
I_N 32 A	600 V, 25 A	
Terminal block width 6 mm / 0.236 in		
9 - 10 mm / 0.37 in ❷		

0.08 - 4 mm²	AWG 28 - 12	
800 V/8 kV/3 ❶	600 V, 20 A	
I_N 26 A	600 V, 25 A	
Terminal block width 6 mm / 0.236 in		
9 - 10 mm / 0.37 in ❷		

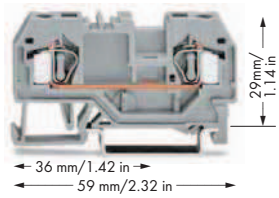

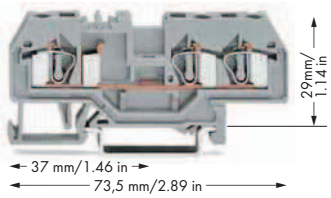

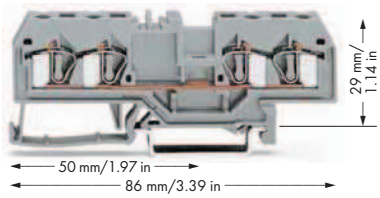

	Item No.	Pack. Unit
2-conductor through terminal block		
gray	**281-901**	50
blue	**281-904** ❸	50
orange	**281-902**	50
red	**281-903**	50
black	**281-905**	50
yellow	**281-906**	50
light gray Ex	**281-992** ❹	50
2-conductor ground terminal block		
green-yellow	**281-907**	50
green-yellow Ex	**281-907/999-950** ❹	50
Other terminal blocks with the same profile:		
Diode	**281-915/281-410**	Page 258
Disconnect	**281-912**	Page 208
Carrier	**281-916**	Page 230

	Item No.	Pack. Unit
3-conductor through terminal block		
gray	**281-681**	50
blue	**281-684** ❸	50
orange	**281-678**	50
red	**281-679**	50
black	**281-685**	50
yellow	**281-686**	50
light gray Ex	**281-993** ❹	50
3-conductor ground terminal block		
green-yellow	**281-687**	50
green-yellow Ex	**281-687/999-950** ❹	50
Other terminal blocks with the same profile:		
Diode	**281-673/281-410**	Page 258
Disconnect	**281-683**	Page 208
Carrier	**281-610**	Page 230

	Item No.	Pack. Unit
4-conductor through terminal block		
gray	**281-652**	50
blue	**281-654** ❸	50
orange	**281-653**	50
red	**281-663**	50
black	**281-664**	50
yellow	**281-668**	50
light gray Ex	**281-994** ❹	50
4-conductor ground terminal block		
green-yellow	**281-657**	50
green-yellow Ex	**281-657/999-950** ❹	50
4-conductor shield terminal block		
white	**281-658**	50
Other terminal blocks with the same profile:		
Diode	**281-665/281-410**	Page 258
Disconnect	**281-659**	Page 208
Disc., test & meas.	**281-666**	Page 208
Carrier	**281-656**	Page 230

Item-Specific Accessories

End and intermediate plate, 2.5 mm thick			
	orange	**281-329**	100 (4x25)
	gray	**281-328**	100 (4x25)
	light gray	**281-349**	100 (4x25)
Separator, oversized, 2 mm thick			
	orange	**281-331**	100 (4x25)
	gray	**281-330**	100 (4x25)
	light gray	**281-350**	100 (4x25)
Ex e/Ex i separator, orange,			
	3 mm thick		
	120 mm	**209-191**	50 (2x25)
	90 mm	**209-190**	50 (2x25)

Item-Specific Accessories

End and intermediate plate, 2.5 mm thick			
	orange	**281-326**	100 (4x25)
	gray	**281-324**	100 (4x25)
	light gray	**281-355**	100 (4x25)
Separator, oversized, 2 mm thick			
	orange	**281-346**	100 (4x25)
	gray	**281-344**	100 (4x25)
	light gray	**281-356**	100 (4x25)
Ex e/Ex i separator, orange,			
	3 mm thick		
	120 mm	**209-191**	50 (2x25)

Item-Specific Accessories

End and intermediate plate, 2.5 mm thick			
	orange	**281-335**	100 (4x25)
	gray	**281-334**	100 (4x25)
	light gray	**281-345**	100 (4x25)
Separator, oversized, 2 mm thick			
	orange	**281-339**	100 (4x25)
	gray	**281-338**	100 (4x25)
	light gray	**281-347**	100 (4x25)
Ex e/Ex i separator, orange,			
	3 mm thick		
	120 mm	**209-191**	50 (2x25)
Cover plate,			
	1 mm thick		
	gray	**284-336**	100
	orange	**284-346**	100

281 Series Accessories

Appropriate marking systems: WMB/WFB
(see Section 13)

Insulation stop,			
❺	5 pcs/strip,		
	0.08 - 0.2 mm² "s" (0.14 mm² "f-st")		
	white	**281-470**	200 (8x25)

Insulation stop,			
❺	5 pcs/strip,		
	0.25 - 0.5 mm²		
	light gray	**281-471**	200 (8x25)

Insulation stop,			
❺	5 pcs/strip,		
	0.25 - 1.5 mm²		
	dark gray	**281-472**	200 (8x25)

For list of approvals and user guide, see pages 634 to 637.

0.08 - 4 mm²	AWG 28 - 12
800 V/8 kV/3 ❶	600 V, 20 A
I_N 32 A	600 V, 25 A

Terminal block width 6 mm / 0.236 in
9 - 10 mm / 0.37 in ❷

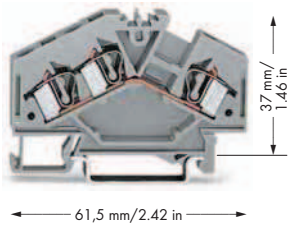

❶ 800 V = rated voltage
8 kV = rated surge voltage
3 = pollution degree
(also see Section 14)

❷ Strip length, see packaging or instructions.

❸ Suitable for Ex i applications

❹ Suitable for Ex e II applications
0.2 mm² - 4 mm²/AWG 24 - 12
550 V, 30 A
(also see Section 14)
Using staggered jumpers reduces the maximum rated voltage to 275 V.

❺ See application notes for:
Test plug modules, pages 194 – 196
Banana plug, page 198
Insulation stop, page 199
Comb-style jumper bar, page 200
Operating tool, page 200
Staggered jumper, page 201
Push-in type wire jumper, page 201
Step-down jumper, pages 178 – 179

	Item No.	Pack. Unit
3-conductor through terminal block		
gray	**281-631**	100
blue	**281-651** ❸	100
light gray Ex	**281-998** ❹	100
3-conductor ground terminal block		
green-yellow	**281-637**	100
green-yellow Ex	**281-637/999-950** ❹	100

Item-Specific Accessories

End and intermediate plate, 2.5 mm thick



orange	**281-313**	100 (4x25)
gray	**281-312**	100 (4x25)
light gray	**281-357**	100 (4x25)

Separator, oversized, 2 mm thick



gray	**281-318**	100 (4x25)
gray	**281-348**	100 (4x25)
light gray	**281-358**	100 (4x25)

Ex e/Ex i separator, orange,
3 mm thick



120 mm	**209-191**	50 (2x25)

Protective warning marker,



with high-voltage symbol, black,
for 5 terminal blocks

yellow	**281-415**	100 (4x25)

281 Series Accessories

Appropriate marking systems: WMB/WFB
(see Section 13)

Adjacent jumper, insulated,



$I_N = I_N$ terminal block

gray	**281-402**	200 (8x25)
yellow-green	**281-422**	200 (8x25)

Alternate jumper, insulated,



$I_N = I_N$ terminal block

gray	**281-409**	100 (4x25)

Push-in type wire jumper, ❺



insulated,
I_N 9 A,
wire size 0.75 mm²

L = 60 mm	**249-125**	10
L = 110 mm	**249-126**	10
L = 250 mm	**249-127**	10

Staggered jumper, ❺



insulated,
width 6 mm/0.236 in,
I_N 32 A

from 1 to 2	**781-452**	100 (4x25)
from 1 to 3	**781-453**	100 (4x25)
from 1 to 4	**781-454**	100 (4x25)
from 1 to 5	**781-455**	50 (2x25)
from 1 to 6	**781-456**	50 (2x25)

Comb-style jumper bar, insulated, ❺



$I_N = I_N$ terminal block

2-way	**281-482**	100 (4x25)
3-way	**281-483**	100 (4x25)
5-way	**281-485**	100 (4x25)
10-way	**281-490**	50 (2x25)

Alternate comb-style jumper bar,



insulated,
$I_N = I_N$ terminal block

2-way	**281-492**	100 (4x25)

Operating tool, of insulating material



2-way	**280-432**	1
3-way	**280-433**	1
5-way	**281-440**	1

Step-down jumper, insulated, ❺



I_N 15 A

gray	**284-414**	50 (2x25)

Step-down jumper, insulated,



I_N 30 A

gray	**284-413**	50 (2x25)

Cover plate,



1 mm thick

gray	**284-334**	100
orange	**284-344**	100

Test plug module, ❺



can be snapped together,
6 mm wide

gray	**281-418**	100 (4x25)

Spacer module,



can be snapped together,
6 mm wide

gray	**281-419**	100 (4x25)

Test plug,



with 500 mm cable,
2 mm Ø

red	**210-136**	50

Test plug,



with 500 mm cable,
2.3 mm Ø

yellow	**210-137**	50

Test plug adapter, 5 mm wide,



for terminal blocks 1.5 - 4 mm²,
for 210-137 test plug 2.3 mm Ø

gray	**280-404**	100 (4x25)

Test plug adapter, 8.3 mm wide,



for terminal blocks 1.5 - 10 mm²,
for test plug 4 mm Ø

gray	**209-170**	50 (2x25)

Banana plug, ❺



for socket 4 mm Ø,
color mixed

215-111	50

Test plug adapter, 6 mm wide,



with CAGE CLAMP®,
for 0.08 - 2.5 mm²

I_N 24 A	**281-407**	100 (4x25)

Screwless end stop,



for DIN 35 rail,
6 mm wide

gray	**249-116**	100 (4x25)

Screwless end stop,



for DIN 35 rail,
10 mm wide

gray	**249-117**	50 (2x25)

Through/Ground Conductor and Ex Terminal Blocks 6 mm²
282 Series

CAGE CLAMP®

0.2 - 6 mm²	AWG 24 - 10
800 V/8 kV/3 ❶	600 V, 30 A
I_N 41 A	600 V, 40 A

Terminal block width 8 mm / 0.315 in
12 - 13 mm / 0.49 in ❷

0.2 - 6 mm²	AWG 24 - 10
800 V/8 kV/3 ❶	600 V, 30 A
I_N 41 A	600 V, 40 A

Terminal block width 8 mm / 0.315 in
12 - 13 mm / 0.49 in ❷

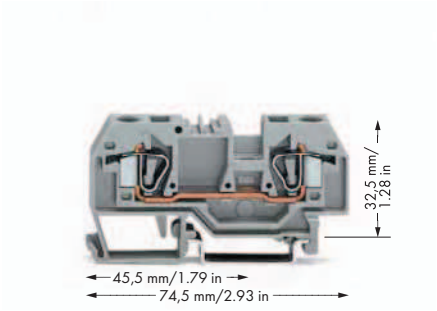

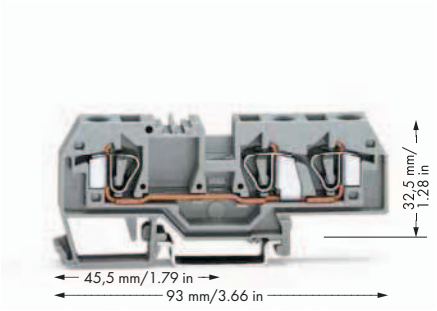

❶ 800 V = rated voltage
8 kV = rated surge voltage
3 = pollution degree
(also see Section 14)

❷ Strip length, see packaging or instructions.

❸ Suitable for Ex i applications

❹ Suitable for Ex e II applications
0.5 mm² - 6 mm²/AWG 20 - 10
550 V, 39 A
Jumper 35 A
(also see Section 14)

❺ See application notes for:
Test plug module, page 197
Banana plug, page 198
Step-down jumper, pages 178 – 179

	Item No.	Pack. Unit
2-conductor through terminal block		
gray	**282-901**	50
blue	**282-904** ❸	50
orange	**282-902**	50
light gray Ex	**282-992** ❹	50
2-conductor ground terminal block		
green-yellow	**282-907**	50
green-yellow Ex	**282-907/999-950** ❹	50

	Item No.	Pack. Unit
3-conductor through terminal block		
gray	**282-681**	25
blue	**282-684** ❸	25
orange	**282-682**	25
light gray Ex	**282-993** ❹	50
3-conductor ground terminal block		
green-yellow	**282-687**	25
green-yellow Ex	**282-687/999-950** ❹	50

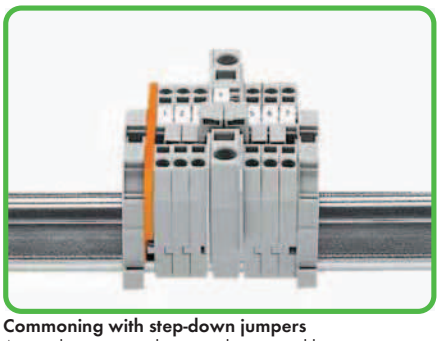

Commoning with step-down jumpers
A step-down cover plate must be inserted between terminal blocks to be jumpered. Step-down jumper 284-414 commons 10/6 mm²/AWG 8/10 terminal blocks with 4/2.5/1.5 mm²/AWG 12/14/16 terminal blocks.

Step-down jumpers are simply pushed down for full insertion, similar to adjacent jumpers.



Commoning with step-down jumpers
A step-down cover plate must be inserted between terminal blocks to be jumpered. Step-down jumper 284-413 commons 10/6 mm²/AWG 8/10 terminal blocks with 6/4 mm²/AWG 10/12 terminal blocks.

Step-down jumpers are simply pushed down for full insertion, similar to adjacent jumpers.

Note:
The total current flowing shall not exceed the rating of the step-down jumper.

Item-Specific Accessories

End and intermediate plate, 2.5 mm thick			
	orange	**282-328**	100 (4x25)
	gray	**282-325**	100 (4x25)
	light gray	**282-330**	100 (4x25)
Separator, oversized, 2 mm thick			
	orange	**282-329**	100 (4x25)
	gray	**282-326**	100 (4x25)
	light gray	**282-331**	100 (4x25)
Cover plate,			
	1 mm thick		
	gray	**282-357**	25
	orange	**282-367**	25

Item-Specific Accessories

End and intermediate plate, 2.5 mm thick			
	orange	**282-339**	100 (4x25)
	gray	**282-308**	100 (4x25)
	light gray	**282-341**	100 (4x25)
Separator, oversized, 2 mm thick			
	orange	**282-340**	100 (4x25)
	gray	**282-309**	100 (4x25)
	light gray	**282-342**	100 (4x25)
Cover plate,			
	1 mm thick		
	gray	**282-358**	25
	orange	**282-368**	25

282 Series Accessories

Appropriate marking systems:
WMB/WFB (see Section 13)

Ex e/Ex i separator, orange,			
	3 mm thick		
	120 mm	**209-191**	50 (2x25)
Adjacent jumper, insulated,			
	I_N 41 A		
	gray	**282-402**	100 (4x25)
	yellow-green	**282-422**	100 (4x25)
Alternate jumper, insulated,			
	I_N 41 A		
	gray	**282-409**	100 (4x25)
Protective warning marker,			
	with high-voltage symbol, black,		
	for 5 terminal blocks		
	yellow	**282-415**	100 (4x25)
Step-down jumper, insulated,			
❺	I_N 15 A		
	gray	**284-414**	50 (2x25)

Step-down jumper, insulated,			
	I_N 30 A		
	gray	**284-413**	50 (2x25)
Test plug adapter, 8.3 mm wide,			
	for terminal blocks 1.5 - 10 mm²,		
	for test plug 4 mm Ø		
	gray	**209-170**	50 (2x25)
Banana plug,			
❺	for socket 4 mm Ø,		
	color mixed		
		215-111	50
B-type test plug module,			
❺	can be snapped together,		
	8 mm wide		
	gray	**709-310**	100 (4x25)
B-type spacer module,			
	can be snapped together,		
	8 mm wide		
	gray	**709-311**	100 (4x25)

For list of approvals and user guide, see pages 634 to 637.

Through/Ground Conductor and Ex Terminal Blocks 10 mm²
284 Series

0.2 - 10 mm²	AWG 24 - 8
800 V/8 kV/3 ❶	600 V, 50 A
I_N 57 A	600 V, 54 A
Terminal block width 10 mm / 0.394 in	
12 - 13 mm / 0.49 in ❷	

0.2 - 10 mm²	AWG 24 - 8
800 V/8 kV/3 ❶	600 V, 50 A
I_N 57 A	600 V, 54 A
Terminal block width 10 mm / 0.394 in	
12 - 13 mm / 0.49 in ❷	

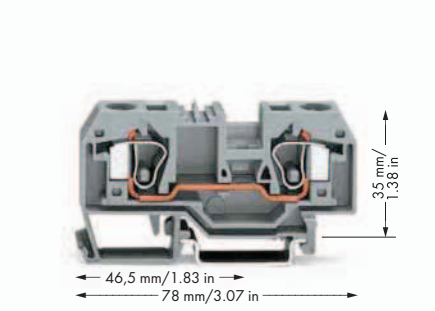

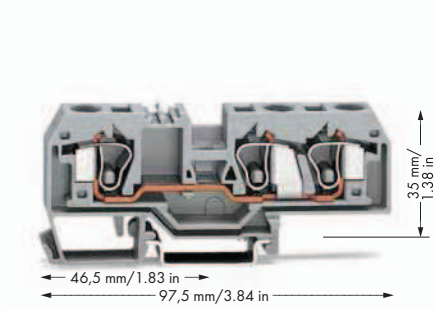

❶ 800 V = rated voltage
8 kV = rated surge voltage
3 = pollution degree
(also see Section 14)

❷ Strip length, see packaging or instructions.

❸ Suitable for Ex e II applications
0.5 mm² - 10 mm²/AWG 20 - 8
550 V, 53 A
(also see Section 14)

❹ See application notes for:
Test plug module, page 197
Banana plug, page 198
Step-down jumper, pages 178 – 179

	Item No.	Pack. Unit
2-conductor through terminal block		
gray	**284-901**	25
blue	**284-904**	25
orange	**284-902**	25
light gray	**284-992** ❸	25
2-conductor ground terminal block		
green-yellow	**284-907**	25
green-yellow	**284-907/999-950** ❸	25

	Item No.	Pack. Unit
3-conductor through terminal block		
gray	**284-681**	25
blue	**284-684**	25
orange	**284-682**	25
light gray	**284-993** ❸	25
3-conductor ground terminal block		
green-yellow	**284-687**	25
green-yellow	**284-687/999-950** ❸	25



Inserting a finger guard seals unused conductor entries.

Item-Specific Accessories

End and intermediate plate, 2.5 mm thick			
	orange	**284-328**	100 (4x25)
	gray	**284-325**	100 (4x25)
	light gray	**284-330**	100 (4x25)
Separator, oversized, 2 mm thick			
	orange	**284-329**	100 (4x25)
	gray	**284-326**	100 (4x25)
	light gray	**284-331**	100 (4x25)
Cover plate,			
	1 mm thick		
	gray	**284-357**	25
	orange	**284-367**	25

Item-Specific Accessories

End and intermediate plate, 2.5 mm thick			
	orange	**284-339**	100 (4x25)
	gray	**284-308**	100 (4x25)
	light gray	**284-341**	100 (4x25)
Separator, oversized, 2 mm thick			
	orange	**284-340**	100 (4x25)
	gray	**284-309**	100 (4x25)
	light gray	**284-342**	100 (4x25)
Cover plate,			
	1 mm thick		
	gray	**284-358**	25
	orange	**284-368**	25

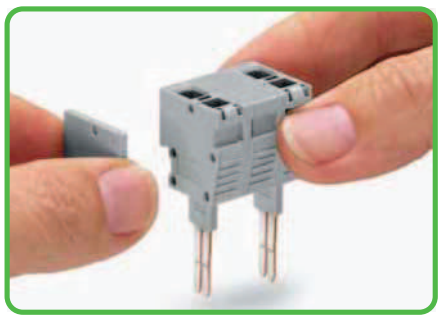

Snapping together test plug and spacer modules with spacer plates to assemble a multipole test plug module (max. 10 poles).

284 Series Accessories

Appropriate marking systems:
WMB/WFB (see Section 13)

Adjacent jumper, insulated,			
	I_N 57 A		
	gray	**284-402**	100 (4x25)
	yellow-green	**284-422**	100 (4x25)
Alternate jumper, insulated,			
	I_N 57 A		
	gray	**284-409**	50 (2x25)
Protective warning marker,			
	with high-voltage symbol, black,		
	for 5 terminal blocks		
	yellow	**284-415**	50 (2x25)
Finger guard,			
	touchproof cover protects unused		
	conductor entries		
	yellow	**284-400**	100 (4x25)
Step-down jumper, insulated,			
❹ 	I_N 15 A		
	gray	**284-414**	50 (2x25)

Step-down jumper, insulated,			
	I_N 30 A		
	gray	**284-413**	50 (2x25)
Test plug adapter, 8.3 mm wide,			
	for terminal blocks 1.5 - 10 mm²,		
	for test plug 4 mm Ø		
	gray	**209-170**	50 (2x25)
Banana plug,			
❹ 	for socket 4 mm Ø,		
	color mixed		
		215-111	50
B-type test plug module,			
❹ 	can be snapped together,		
	8 mm wide		
	gray	**709-310**	100 (4x25)
B-type spacer plate,			
	can be snapped together,		
	2 mm wide		
	gray	**709-312**	100 (4x25)

For list of approvals and user guide, see pages 634 to 637.

Through/Ground Conductor and Ex Terminal Blocks 16 mm²
283 Series

CAGE CLAMP®

0.2 - 16 mm²	AWG 24 - 6
800 V/8 kV/3 ❶	600 V, 65 A
I_N 76 A	600 V, 70 A

Terminal block width 12 mm / 0.472 in
16 - 17 mm / 0.65 in ❷

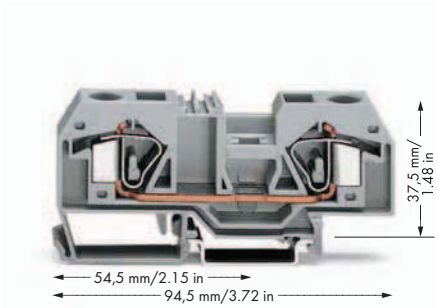

❶ 800 V = rated voltage
8 kV = rated surge voltage
3 = pollution degree
(also see Section 14)

❷ Strip length, see packaging or instructions.

❸ Suitable for Ex e II applications
0.5 mm² - 16 mm²/AWG 20 - 6
550 V, 68 A
Jumper 63 A
(also see Section 14)

❹ See application notes for:
Banana plug, page 198
Step-down jumper, pages 178 – 179

	Item No.	Pack. Unit
2-conductor through terminal block		
gray	**283-901**	20
blue	**283-904**	20
orange	**283-902**	20
light gray	**283-992** ❸	20
2-conductor ground terminal block		
green-yellow	**283-907**	20
green-yellow	**283-907/999-950** ❸	20

283 Series Accessories

Appropriate marking systems (see Section 13)

End and intermediate plate, 2.5 mm thick			
	orange	**283-328**	50 (2x25)
	gray	**283-325**	50 (2x25)
	light gray	**283-330**	50 (2x25)
Separator, oversized, 2 mm thick			
	orange	**283-329**	50 (2x25)
	gray	**283-326**	50 (2x25)
	light gray	**283-331**	50 (2x25)
Adjacent jumper, insulated,			
	I_N 70 A		
	gray	**283-402**	50 (2x25)
	yellow-green	**283-422**	50 (2x25)
Alternate jumper, insulated,			
	I_N 76 A		
	gray	**283-409**	50 (2x25)
Protective warning marker,			
	with high-voltage symbol, black, for 5 terminal blocks		
	yellow	**283-415**	50 (2x25)
Finger guard,			
	touchproof cover protects unused conductor entries		
	yellow	**283-400**	100 (4x25)
Step-down jumper, insulated,			
❹	I_N 32 A		
	gray	**283-414**	50 (2x25)
Cover plate,			
	1 mm thick		
	gray	**283-357**	25
	orange	**283-367**	25
Test plug adapter, 11.6 mm wide,			
	for 1.5 - 16 mm² terminal blocks, for test plug 4 mm Ø		
	gray	**283-404**	25
Banana plug,			
❹	for socket 4 mm Ø, color mixed		
		215-111	50
Screwless end stop,			
	for DIN 35 rail, 6 mm wide		
	gray	**249-116**	100 (4x25)
Screwless end stop,			
	for DIN 35 rail, 10 mm wide		
	gray	**249-117**	50 (2x25)

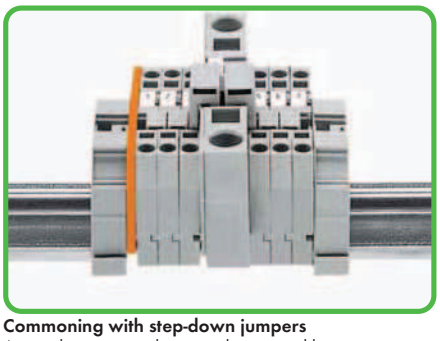

Commoning with step-down jumpers
A step-down cover plate must be inserted between terminal blocks to be jumpered. Step-down jumper 284-414 commons 16 mm²/AWG 6 terminal blocks with 4 mm²/AWG 12 terminal blocks.

Step-down jumpers are simply pushed down for full insertion, similar to adjacent jumpers.

Note:
The total current flowing shall not exceed the rating of the step-down jumper.

For list of approvals and user guide, see pages 634 to 637.