Karta danych technicznych
Trunking, type WDK 30030

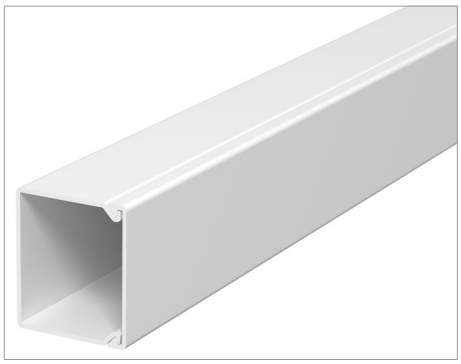

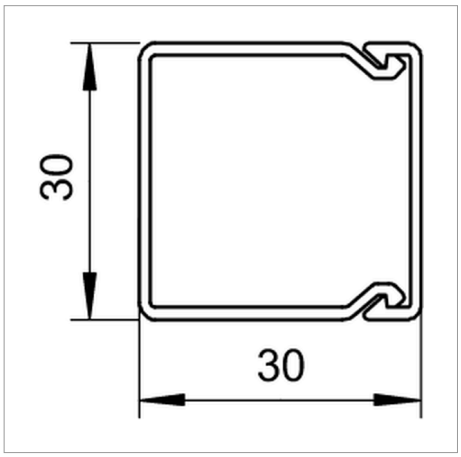

Trunking cover and base with base perforation.

Type	Colour	Length mm	Pack. m	Weight kg/100 m	Nr kat.
WDK30030RW	Pure white; RAL 9010	2000	32	24.900	6191096
WDK30030CW	Cream; RAL 9001	2000	32	24.900	6026826
WDK30030LGR	Light grey; RAL 7035	2000	32	24.900	6026796
WDK30030GR	Stone grey; RAL 7030	2000	32	24.900	6026818

PVC Polyvinylchloride /m

Legenda



WDK trunking, trunking depth 30 mm



Nail device

CE Communautés Européennes, EC declaration of conformity according to EC directives



Verband der Elektrotechnik, Elektronik, Informationstechnik e.V., Germany