# Karta danych technicznych
# Trunking, type WDK 10030

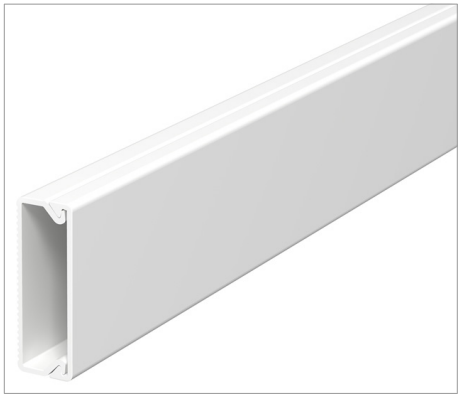

Trunking cover and base with base opening.

| Type | Colour | Length<br>mm | Pack.<br>m | Weight<br>kg/100 m | Nr kat. |
|---|---|---|---|---|---|
| WDK10030RW | Pure white; RAL 9010 | 2000 | 64 | 13.000 | 6150780 |
| WDK10030CW | Cream; RAL 9001 | 2000 | 64 | 13.000 | 6150772 |

PVC Polyvinylchloride /m

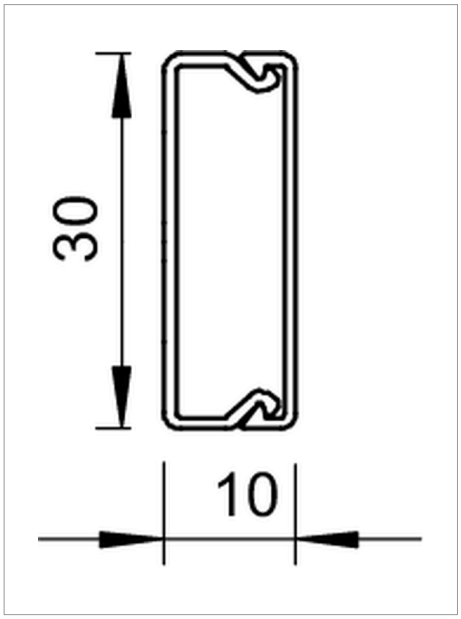

# Legenda




WDK trunking, trunking depth 10 mm



Nail device

CE Communautés Européennes, EC declaration of conformity according to EC directives