Karta danych technicznych
Trunking, type WDK 15015

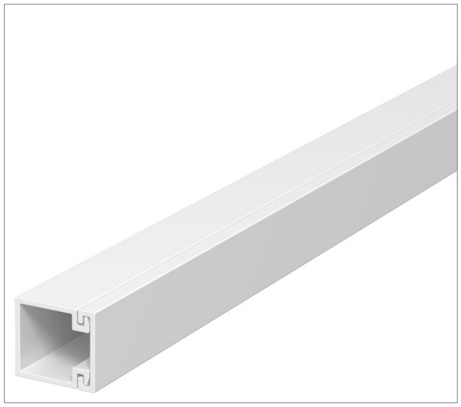

Trunking cover and base with base opening.

Type	Colour	Length mm	Pack. m	Weight kg/100 m	Nr kat.
WDK15015RW	Pure white; RAL 9010	2000	56	11.000	6191002
WDK15015CW	Cream; RAL 9001	2000	56	10.600	6024963
WDK15015LGR	Light grey; RAL 7035	2000	56	10.600	6024947
WDK15015GR	Stone grey; RAL 7030	2000	56	10.600	6024955

PVC Polyvinylchloride /m

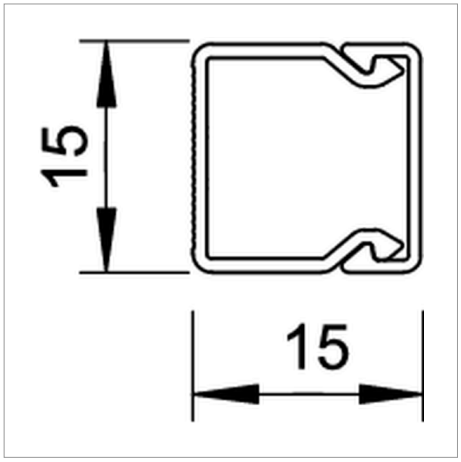

Legenda



WDK trunking, trunking depth 15 mm

CE Communautés Européennes, EC declaration of conformity according to EC directives

VDE Verband der Elektrotechnik, Elektronik, Informationstechnik e.V., Germany