Karta danych technicznych
Trunking, type WDK-N 25040

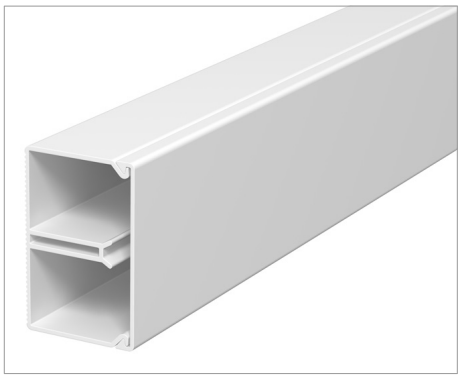

Trunking cover and base with nail strip and base perforation.

Type	Colour	Length mm	Pack. m	Weight kg/100 m	Nr kat.
WDK-N25040RW	Pure white; RAL 9010	2000	36	36.000	6150640
WDK-N25040CW	Cream; RAL 9001	2000	36	36.000	6150632

PVC Polyvinylchloride /m

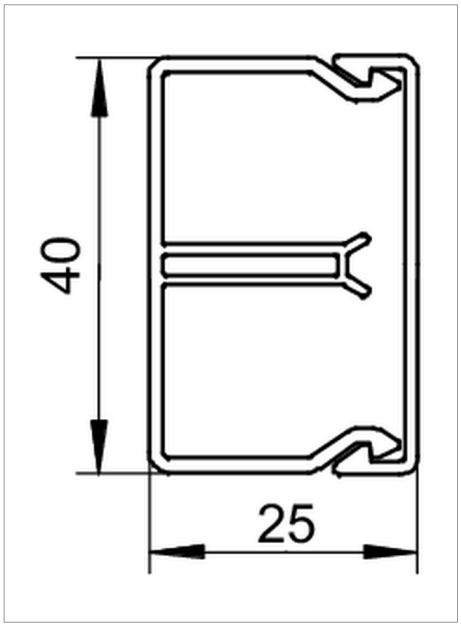

Legenda



WDK-N trunking, trunking depth 25 mm


Nail device

CE Communautés Européennes, EC declaration of conformity according to EC directives



Verband der Elektrotechnik, Elektronik, Informationstechnik e.V., Germany