Karta danych technicznych
Trunking, type WDK 60090

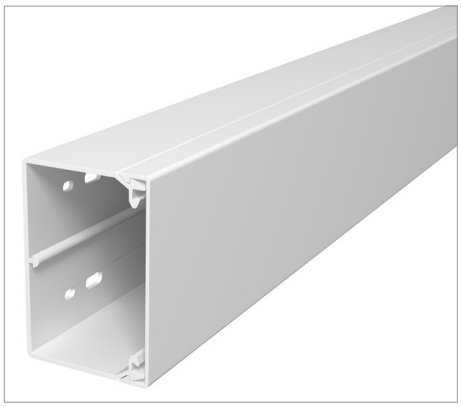

Trunking cover and base with base opening.

Type	Colour	Length mm	Pack. m	Weight kg/100 m	Nr kat.
WDK60090RW	Pure white; RAL 9010	2000	24	110.000	6191207
WDK60090CW	Cream; RAL 9001	2000	24	110.000	6021913
WDK60090LGR	Light grey; RAL 7035	2000	24	110.000	6027113
WDK60090GR	Stone grey; RAL 7030	2000	24	110.000	6022006

PVC Polyvinylchloride /m

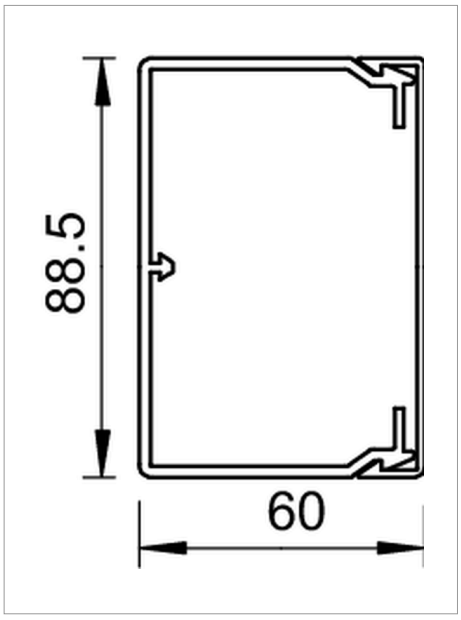

Legenda



WDK trunking, trunking depth 60 mm



Nail device

CE Communautés Européennes, EC declaration of conformity according to EC directives



Verband der Elektrotechnik, Elektronik, Informationstechnik e.V., Germany