Fuse Disconnect Terminal Blocks with Pivoting Fuse Holder, for Miniature Metric Fuses, 281 Series

Blown fuse indication



Blown fuse indication by LED or neon lamp.

Fuse replacement



Before replacing the fuse, pivot the fuse holder in the locked open position.

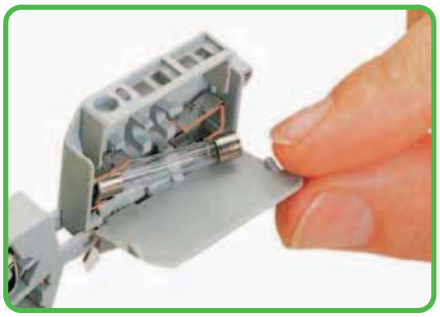

One end of the fuse is automatically ejected from the holder when opening the cover.

CAGE CLAMP® connection

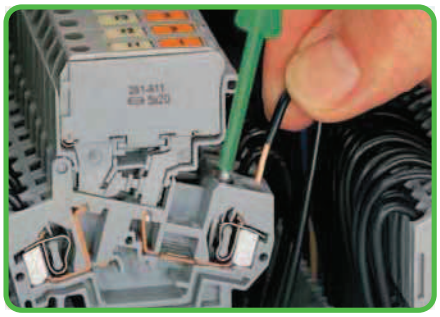

Conductor termination

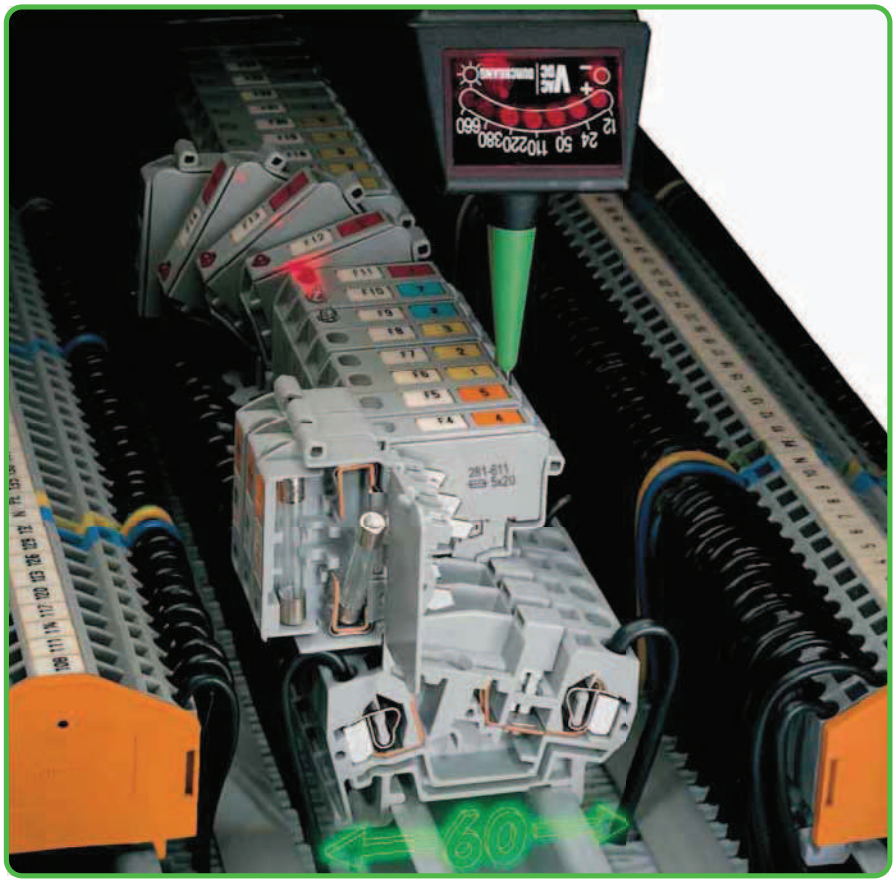

Commoning

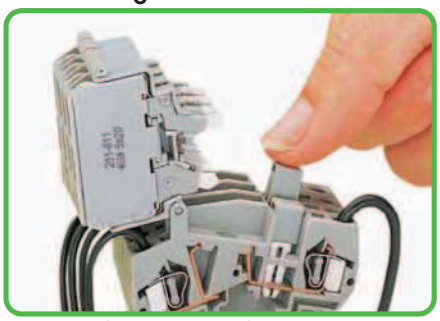

Distribution of current to several fuse-protected circuits via insulated touchproof jumpers.

Testing

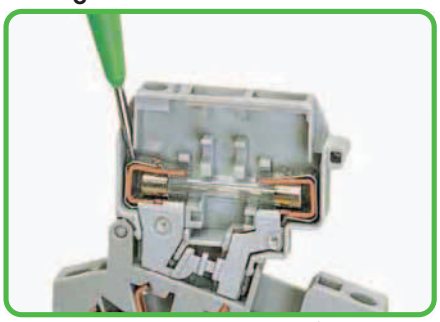

Voltage test, either at input or output with fuse holder in closed position (live).

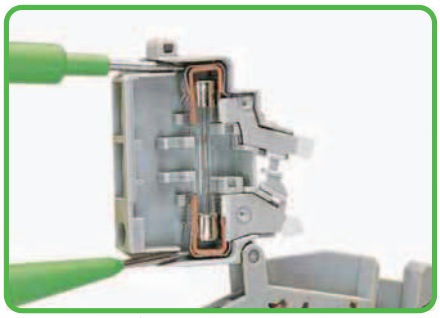

Through test with fuse holder in open position (no voltage).

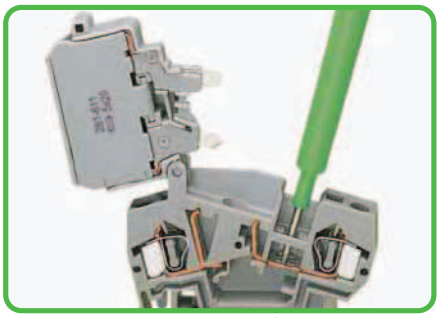

Voltage test at input in the test slot of the current bar.



CAGE CLAMP® clamps the following copper conductors:*

solid



stranded



fine-stranded, also with tinned single strands

* For aluminum conductors, see notes in Section 14.

Fuse replacement (continued)



The fuse can be easily removed by hand.

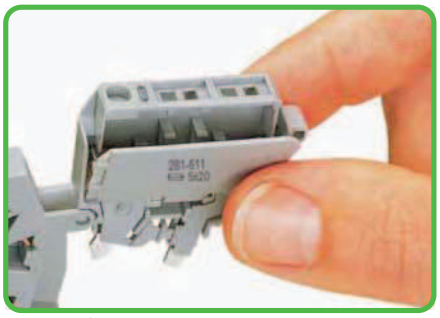

Insert new fuse snap the cover closed.

Spare fuse

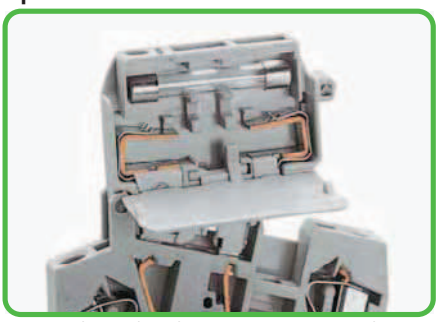

Storage of spare fuse (fuse holder without blown fuse indication).

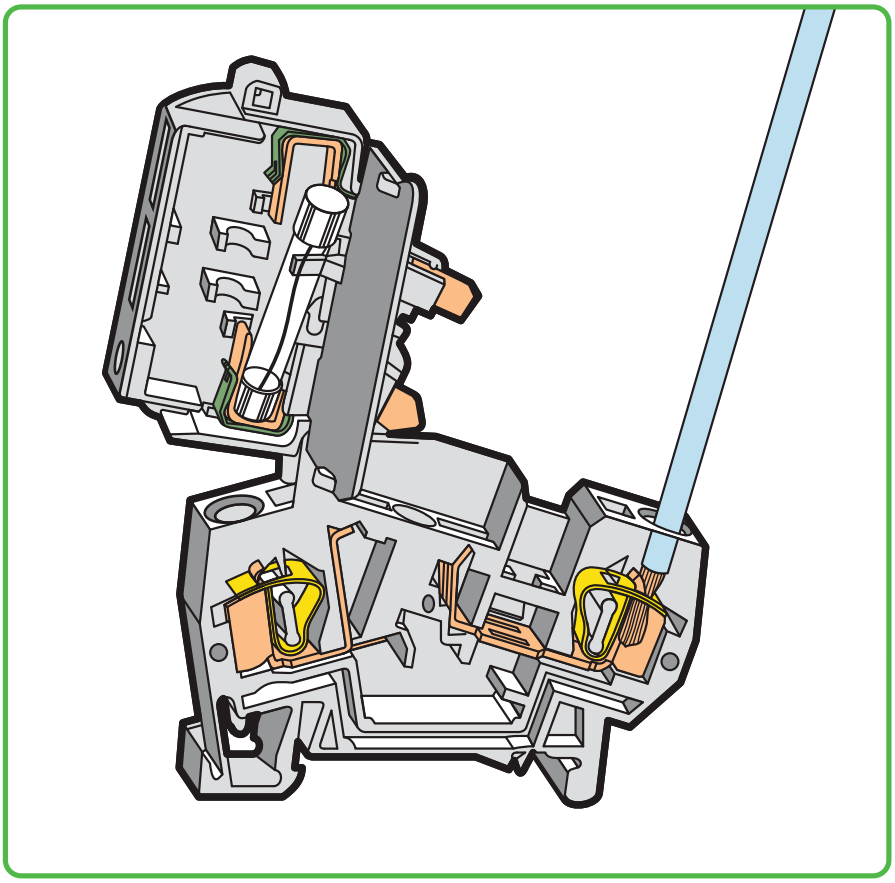

Touchproof protection



"Touchproof" protection in all positions of the fuse holder.

Locked position

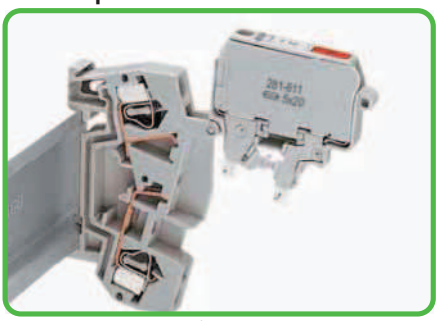

Fuse holder will remain safely locked open in vertical assemblies.

Testing (continued)



Testing voltage at the output via separate test slot.

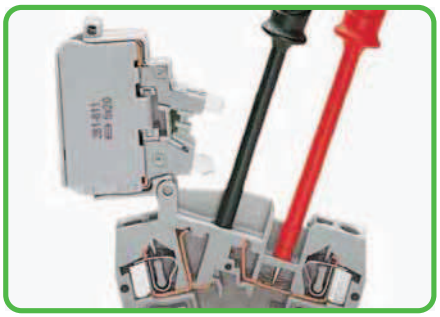

Current measuring between jumper slot and separate test slot.

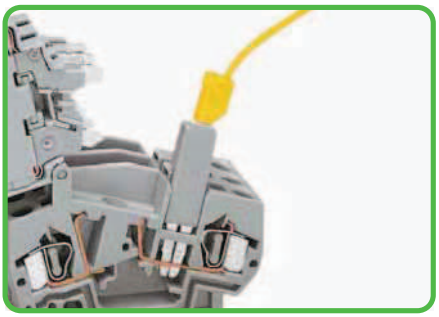

Voltage testing at input via 280-404 test plug adapter (shown) or 281-407 test plug.



fine-stranded, tip-bonded



fine-stranded, with ferrule ❶ (gastight crimped)



fine-stranded, with pin terminal (gastight crimped)

❶ When using ferrules, the max. conductor cross section accommodated is one size smaller than max. rating of terminal block.

Fuse Disconnect Terminal Blocks with Pivoting Fuse Holder 4 mm² for Miniature Metric Fuses 5 x 20 mm, 5 x 25 mm and 5 x 30 mm
281 Series

0.08 - 4 mm²	AWG 28 - 12	
800 V/8 kV/3 ❶ ❷	600 V, 10 A	
I_N 10 A (6.3 A)	600 V, 10 A	
Terminal block width 8 mm / 0.315 in		
9 - 10 mm / 0.37 in ❸		

0.08 - 4 mm²	AWG 28 - 12	
800 V/8 kV/3 ❶ ❷	30 V, 10 A	
I_N 10 A (6.3 A)	230 V, 10 A	
Terminal block width 8 mm / 0.315 in		
9 - 10 mm / 0.37 in ❸		

0.08 - 4 mm²	AWG 28 - 12	
800 V/8 kV/3 ❶ ❷	220 V, 10 A	
I_N 10 A (6.3 A)	230 V, 10 A	
Terminal block width 8 mm / 0.315 in		
9 - 10 mm / 0.37 in ❸		

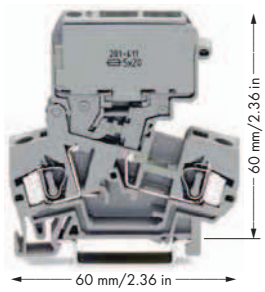

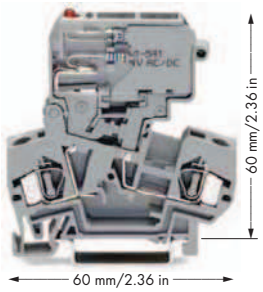

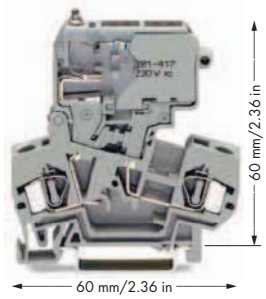

	Item No.	Pack. Unit
Fuse disconnect terminal block with pivoting fuse holder,		
for miniature metric fuses 5 x 20 mm,		
without blown fuse indication,		
Nominal voltage and current are given by the fuse.		
○ gray	**281-611**	50
● orange	**281-616**	50
Fuse disconnect terminal block with pivoting fuse holder,		
for miniature metric fuses 5 x 25 mm,		
without blown fuse indication,		
Nominal voltage and current are given by the fuse.		
○ gray	**281-612**	50
Fuse disconnect terminal block with pivoting fuse holder,		
for miniature metric fuses 5 x 30 mm,		
without blown fuse indication,		
Nominal voltage and current are given by the fuse.		
○ gray	**281-622**	50
Miniature metric fuse on request		

	Item No.	Pack. Unit
Fuse disconnect terminal block with pivoting fuse holder,		
for miniature metric fuses 5 x 20 mm,		
with blown fuse indication by LED, gray		
Nominal voltage and current are given by the LED or fuse.		
Leakage current in case of blown fuse: LED 6mA		
○ 15 - 30 V	**281-611/281-541**	50
○ 30 - 65 V	**281-611/281-542**	50
Fuse disconnect terminal block with pivoting fuse holder,		
for miniature metric fuses 5 x 25 mm,		
with blown fuse indication by LED, gray		
Nominal voltage and current are given by the LED or fuse.		
Leakage current in case of blown fuse: LED 6mA		
○ 15 - 30 V	**281-612/281-541**	50
○ 30 - 65 V	**281-612/281-542**	50
Fuse disconnect terminal block with pivoting fuse holder,		
for miniature metric fuses 5 x 30 mm,		
with blown fuse indication by LED, gray		
Nominal voltage and current are given by the LED or fuse.		
Leakage current in case of blown fuse: LED 6mA		
○ 15 - 30 V	**281-622/281-541**	50
○ 30 - 65 V	**281-622/281-542**	50
Miniature metric fuse on request		

	Item No.	Pack. Unit
Fuse disconnect terminal block with pivoting fuse holder,		
for miniature metric fuses 5 x 20 mm,		
with blown fuse indication by neon lamp, gray		
Nominal voltage and current are given by the LED or fuse.		
Leakage current in case of blown fuse: Neon lamp < 0.4mA		
○ 230 V	**281-611/281-417**	50
○ 120 V	**281-611/281-418**	50
Fuse disconnect terminal block with pivoting fuse holder,		
for miniature metric fuses 5 x 25 mm,		
with blown fuse indication by neon lamp, gray		
Nominal voltage and current are given by the LED or fuse.		
Leakage current in case of blown fuse: Neon lamp < 0.4mA		
○ 230 V	**281-612/281-417**	50
○ 120 V	**281-612/281-418**	50
Fuse disconnect terminal block with pivoting fuse holder,		
for miniature metric fuses 5 x 30 mm,		
with blown fuse indication by neon lamp, gray		
Nominal voltage and current are given by the LED or fuse.		
Leakage current in case of blown fuse: Neon lamp < 0.4mA		
○ 230 V	**281-622/281-417**	50
○ 120 V	**281-622/281-418**	50
Miniature metric fuse on request		

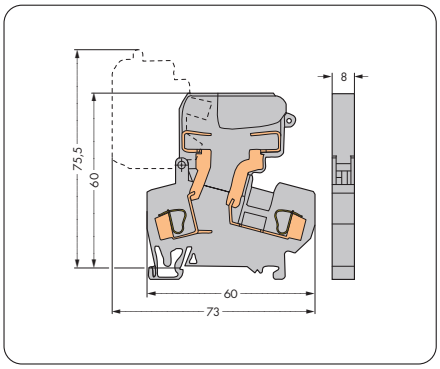

Dimensions in mm

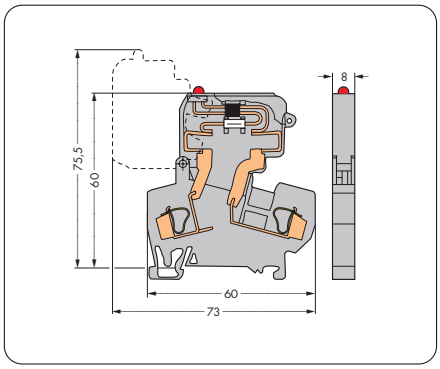

Dimensions in mm

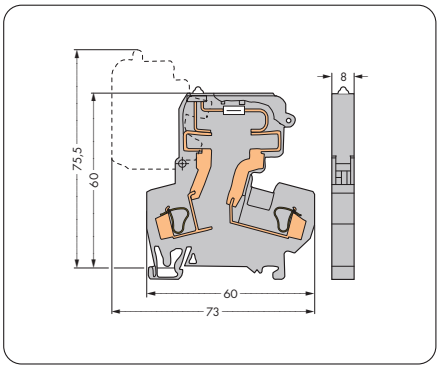

Dimensions in mm

For list of approvals and user guide, see pages 634 to 637.

0.08 - 4 mm²	AWG 28 - 12
800 V/8 kV/3 ❶	600 V, 16 A
I_N 16 A	600 V, 10 A

Terminal block width 8 mm / 0.315 in
9 - 10 mm / 0.37 in ❸

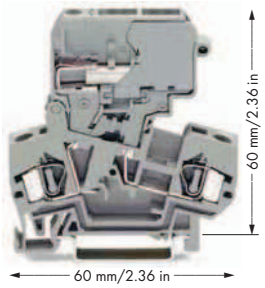

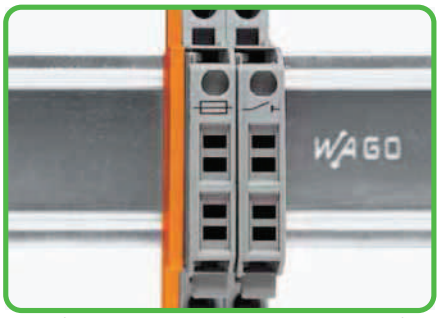

Fuse or fuse disconnect terminal blocks with a width of 8 mm/0.315 in can be assembled adjacently. At the end of an assembly, if there is **no** adjacent Fuse or fuse disconnect terminal block, an end or intermediate plate must be used.

❶ 800 V = rated voltage
8 kV = rated surge voltage
3 = pollution degree
(also see Section 14)

❷ Electrical ratings are given by the fuse (also see pages 234 – 235).

❸ Strip length, see packaging or instructions.

	Item No.	Pack. Unit
Disconnect terminal block with movable disconnect slide link		
gray	**281-624**	50
orange	**281-672**	50

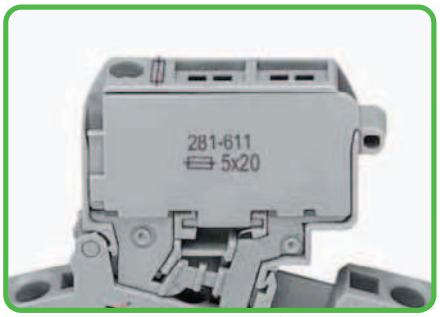

Fuse holders are printed with correct fuse size.

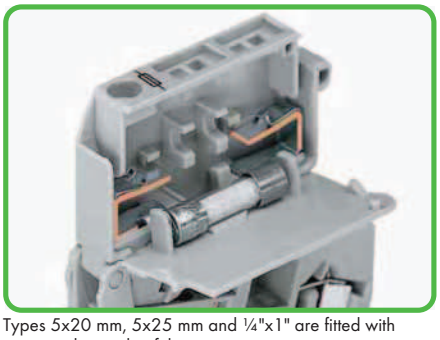

Types 5x20 mm, 5x25 mm and ¼"x1" are fitted with stops on the inside of the cover.

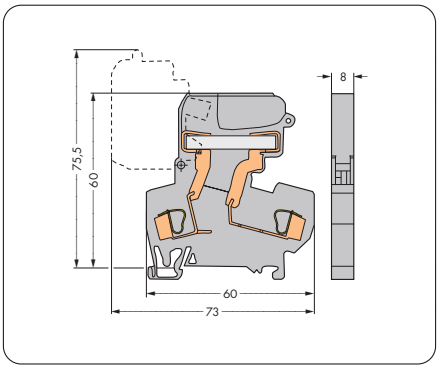

Dimensions in mm

281 Series Accessories

Appropriate marking system:
WMB (see Section 13)

End and intermediate plate, 2.5 mm thick			
	orange	**281-309**	100 (4x25)
	gray	**281-311**	100 (4x25)
Adjacent jumper, insulated,			
	I_N = I_N terminal block		
	gray	**281-402**	200 (8x25)
Collective carrier for adjacent jumpers			
	gray	**209-100**	50 (2x25)
Test plug adapter, 5 mm wide,			
	for terminal blocks 1.5 - 4 mm²,		
	for 210-137 test plug 2.3 mm Ø		
	gray	**280-404**	100 (4x25)
Test plug,			
	with 500 mm cable,		
	2.3 mm Ø		
	yellow	**210-137**	50
Test plug adapter, 6 mm wide,			
	with CAGE CLAMP®,		
	for 0.08 - 2.5 mm²		
	I_N 24 A	**281-407**	100 (4x25)
Push-in type wire jumper,			
	insulated,		
	I_N 9 A,		
	wire size 0.75 mm²		
	L = 60 mm	**249-125**	10
	L = 110 mm	**249-126**	10
	L = 250 mm	**249-127**	10
Interlocking link,			
	mechanically locks multiple links,		
	1 m/3'3" long		
	transparent	**210-254**	1
Screwless end stop,			
	for DIN 35 rail,		
	6 mm wide		
	gray	**249-116**	100 (4x25)
Screwless end stop,			
	for DIN 35 rail,		
	10 mm wide		
	gray	**249-117**	50 (2x25)

Fuse Disconnect Terminal Blocks with Pivoting Fuse Holder 4 mm² for Miniature Metric Fuses ¼" x 1" mm and ¼" x 1¼" mm
281 Series

0.08 - 4 mm²	AWG 28 - 12	
800 V/8 kV/3 ❶ ❷	600 V, 10 A	
I_N 10 A (6.3 A)	600 V, 10 A	
Terminal block width 10 mm / 0.394 in		
9 - 10 mm / 0.37 in ❸		

0.08 - 4 mm²	AWG 28 - 12	
800 V/8 kV/3 ❶ ❷	30 V, 10 A	
I_N 10 A (6.3 A)	30 V, 10 A	
Terminal block width 10 mm / 0.394 in		
9 - 10 mm / 0.37 in ❸		

0.08 - 4 mm²	AWG 28 - 12	
800 V/8 kV/3 ❶ ❷	220 V, 10 A	
I_N 10 A (6.3 A)	100 V, 10 A	
Terminal block width 10 mm / 0.394 in		
9 - 10 mm / 0.37 in ❸		

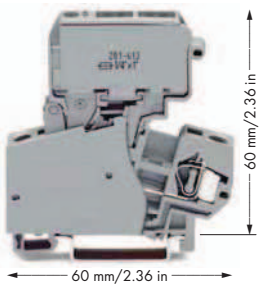

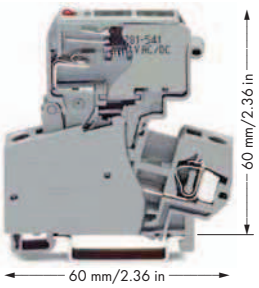

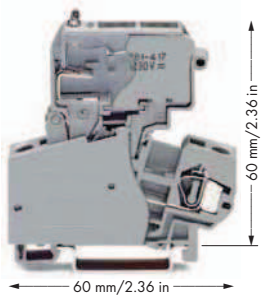

	Item No.	Pack. Unit
Fuse disconnect terminal block with pivoting fuse holder,		
for miniature fuses ¼" x 1",		
without blown fuse indication,		
Nominal voltage and current are given by the fuse.		
◯ gray	**281-613**	50
Fuse disconnect terminal block with pivoting fuse holder,		
for miniature fuses ¼" x 1¼",		
without blown fuse indication,		
Nominal voltage and current are given by the fuse.		
◯ gray	**281-623**	50
Miniature metric fuse on request		

	Item No.	Pack. Unit
Fuse disconnect terminal block with pivoting fuse holder,		
for miniature fuses ¼" x 1",		
with blown fuse indication by LED, gray		
Nominal voltage and current are given by the LED or fuse.		
Leakage current in case of blown fuse: LED 6mA		
◯ 15 - 30 V	**281-613/281-541**	50
◯ 30 - 65 V	**281-613/281-542**	50
Fuse disconnect terminal block with pivoting fuse holder,		
for miniature fuses ¼" x 1¼",		
with blown fuse indication by LED, gray		
Nominal voltage and current are given by the LED or fuse.		
Leakage current in case of blown fuse: LED 6mA		
◯ 15 - 30 V	**281-623/281-541**	50
◯ 30 - 65 V	**281-623/281-542**	50
Miniature metric fuse on request		

	Item No.	Pack. Unit
Fuse disconnect terminal block with pivoting fuse holder,		
for miniature fuses ¼" x 1",		
with blown fuse indication by neon lamp, gray		
Nominal voltage and current are given by the LED or fuse.		
Leakage current in case of blown fuse: Neon lamp < 0.4mA		
◯ 230 V	**281-613/281-417**	50
◯ 120 V	**281-613/281-418**	50
Fuse disconnect terminal block with pivoting fuse holder,		
for miniature fuses ¼" x 1¼",		
with blown fuse indication by neon lamp, gray		
Nominal voltage and current are given by the LED or fuse.		
Leakage current in case of blown fuse: Neon lamp < 0.4mA		
◯ 230 V	**281-623/281-417**	50
◯ 120 V	**281-623/281-418**	50
Miniature metric fuse on request		

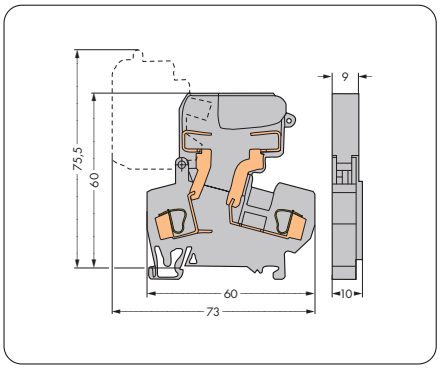

Dimensions in mm

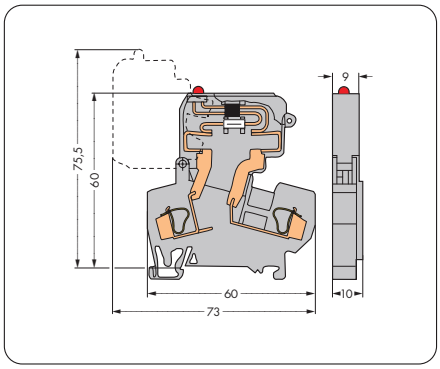

Dimensions in mm

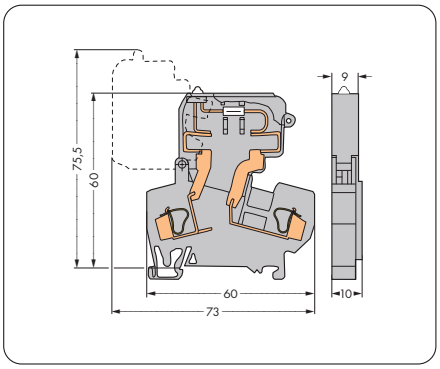

Dimensions in mm

For list of approvals and user guide, see pages 634 to 637.

❶ 800 V = rated voltage
8 kV = rated surge voltage
3 = pollution degree
(also see Section 14)

❷ Electrical ratings are given by the fuse (also see pages 234 – 235).

❸ Strip length, see packaging or instructions.



A spacer is standard equipment for 10 mm/0.394 in wide fuse terminal blocks. At the end of an assembly, or if there is **no** adjacent fuse terminal block, an end or intermediate plate must be used.

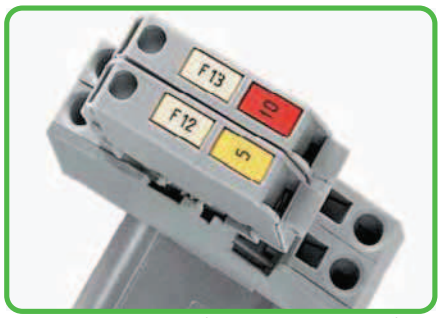

Two marker slots each per fuse holder are available for individual WMB Multi marking.
(example: 8 mm/0.315 in terminal blocks).

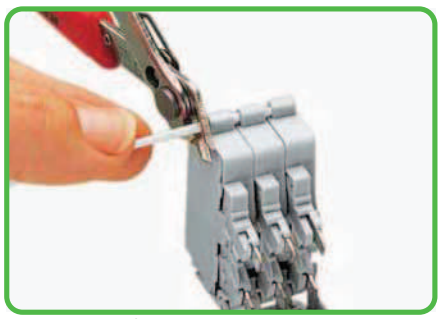

Ganging several fuse holders with a connecting strip (example: 8 mm/0.315 in terminal blocks).

281 Series Accessories

Appropriate marking system:
WMB (see Section 13)

End and intermediate plate, 2.5 mm thick			
	orange	**281-309**	100 (4x25)
	gray	**281-311**	100 (4x25)
Adjacent jumper, insulated,			
	I_N = I_N terminal block		
	gray	**281-402**	200 (8x25)
Collective carrier for adjacent jumpers			
	gray	**209-100**	50 (2x25)
Test plug adapter, 5 mm wide,			
	for terminal blocks 1.5 - 4 mm²,		
	for 210-137 test plug 2.3 mm Ø		
	gray	**280-404**	100 (4x25)
Test plug,			
	with 500 mm cable,		
	2.3 mm Ø		
	yellow	**210-137**	50
Test plug adapter, 6 mm wide,			
	with CAGE CLAMP®,		
	for 0.08 - 2.5 mm²		
	I_N 24 A	**281-407**	100 (4x25)
Push-in type wire jumper,			
	insulated,		
	I_N 9 A,		
	wire size 0.75 mm²		
	L = 60 mm	**249-125**	10
	L = 110 mm	**249-126**	10
	L = 250 mm	**249-127**	10
Interlocking link,			
	mechanically locks multiple links,		
	1 m/3'3" long		
	transparent	**210-254**	1
Screwless end stop,			
	for DIN 35 rail,		
	6 mm wide		
	gray	**249-116**	100 (4x25)
Screwless end stop,			
	for DIN 35 rail,		
	10 mm wide		
	gray	**249-117**	50 (2x25)

Fuse Plugs on Carrier Terminal Blocks 4 mm²
281 Series

Fuse plug with pull-tab
for miniature metric fuses 5 x 20 mm and 5 x 25 mm
250 V / I_N 6.3 A ❹
Plug width 6 mm / 0.236 in





Circuit I Circuit II

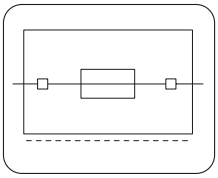

Circuit I Circuit II

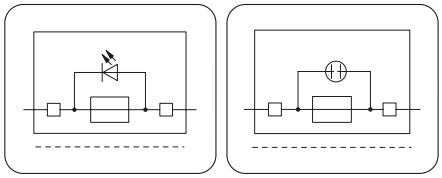

	Item No.	Pack. Unit
Fuse plug with pull-tab, for miniature metric fuses 5 x 20 mm and 5 x 25 mm, Nominal voltage and current are given by the fuse. 6 mm wide, gray		
◯ Circuit I	**281-511**	50
Fuse plug with pull-tab, for miniature metric fuses 5 x 20 mm and 5 x 25 mm, with hole for one LED (for self-assembly), Nominal voltage and current are given by the LED or fuse. 6 mm wide, gray		
◯ Circuit II	**281-512**	50

Fuse plug with pull-tab
for miniature metric fuses 5 x 20 mm and 5 x 25 mm
250 V / I_N 6.3 A ❹
Plug width 6 mm / 0.236 in

	Item No.	Pack. Unit
Fuse plug with pull-tab, for miniature metric fuses 5 x 20 mm and 5 x 25 mm, with LED indicator, 24 V AC/DC, Nominal voltage and current are given by the LED or fuse. Leakage current in case of blown fuse: 5 - 20mA, 6 mm wide, gray		
◯ Circuit I	**281-512/281-501**	50
Fuse plug with pull-tab, for miniature metric fuses 5 x 20 mm and 5 x 25 mm, with neon lamp 120 V AC/DC, Nominal voltage and current are given by the LED or fuse. Leakage current in case of blown fuse: Neon lamp < 0.4mA, 6 mm wide, gray		
◯ Circuit II	**281-512/281-418**	50
Fuse plug with pull-tab, for miniature metric fuses 5 x 20 mm and 5 x 25 mm, with neon lamp 230 V AC/DC, Nominal voltage and current are given by the LED or fuse. Leakage current in case of blown fuse: Neon lamp < 0.4mA, 6 mm wide, gray		
◯ Circuit II	**281-512/281-417**	50

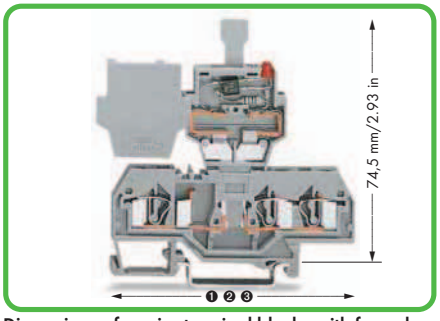

Dimensions of carrier terminal blocks with fuse plug
❶ 59 mm / 2.32 in for 281-916
❷ 73.5 mm / 2.89 in for 281-610
❸ 86 mm / 3.39 in for 281-656

For terminal blocks with side marking, see www.wagocatalog.com

Accessories

Appropriate marking system: 4 mm wide WSB for plug and WMB for terminal block

2-conductor carrier terminal block, ❶	0.08 - 4 mm² / AWG 28 - 12, Terminal block width 6 mm / 0.236 in		
	gray	**281-916**	50
End and intermediate plate, 2.5 mm thick			
	orange	**281-329**	100 (4x25)
	gray	**281-328**	100 (4x25)
Wire commoning chain, 50 connections,	insulated, I_N 8 A		
	black	**210-103**	1

3-conductor carrier terminal block, ❷	0.08 - 4 mm² / AWG 28 - 12, Terminal block width 6 mm / 0.236 in		
	gray	**281-610**	50
End and intermediate plate, 2.5 mm thick			
	orange	**281-326**	100 (4x25)
	gray	**281-324**	100 (4x25)
Wire commoning chain, 50 connections,	insulated, I_N 8 A		
	blue	**210-123**	1

Accessories

4-conductor carrier terminal block, ❸	0.08 - 4 mm² / AWG 28 - 12, Terminal block width 6 mm / 0.236 in		
	gray	**281-656**	50
End and intermediate plate, 2.5 mm thick			
	orange	**281-335**	100 (4x25)
	gray	**281-334**	100 (4x25)
Comb-style jumper bar, insulated,	I_N = I_N terminal block		
	2-way	**281-482**	100 (4x25)
	3-way	**281-483**	100 (4x25)
	5-way	**281-485**	100 (4x25)
	10-way	**281-490**	50 (2x25)
Alternate comb-style jumper bar,	insulated, I_N = I_N terminal block		
	2-way	**281-492**	100 (4x25)
Operating tool, of insulating material			
	2-way	**280-432**	1
	3-way	**280-433**	1
	5-way	**281-440**	1
WSB Quick marking system,	10 strips with 10 markers per card, WSB Markers 4 mm wide		
	plain	**209-701**	5
WSB Quick marking system, plain,	10 strips with 10 markers per card, WSB Markers 4 mm wide		
	yellow	**209-701/000-002**	
	red	**209-701/000-005**	
	blue	**209-701/000-006**	
	gray	**209-701/000-007**	
	orange	**209-701/000-012**	
	light green	**209-701/000-017**	
	green	**209-701/000-023**	
	violet	**209-701/000-024**	
			5
Shorting link, 5 x 20 mm,	if the fuse plug is used as disconnect plug		
	I_N 6.3 A	**281-503**	250 (10x25)

For list of approvals and user guide, see pages 634 to 637.

❹ Electrical ratings are given by the fuse or LED nominal voltage (also see pages 234 – 235).

Accessories

WSB Quick marking system,			
	for fuse plug 281-5..,		
	WSB Markers 4 mm wide		
	F1, ..., F10 (10x)	**209-787**	5
	F11, ..., F20 (10x)	**209-700/209-124**	
	F21, ..., F30 (10x)	**209-700/209-125**	
	F31, ..., F40 (10x)	**209-700/209-126**	
	F41, ..., F50 (10x)	**209-700/209-127**	
			5
WMB Multi marking system,			
	10 strips with 10 markers per card,		
	stretchable 5 - 5.2 mm		
	plain	**793-5501**	5
WMB Multi marking system, plain,			
	10 strips with 10 markers per card,		
	stretchable 5 - 5.2 mm		
	yellow	**793-5501/000-002**	
	red	**793-5501/000-005**	
	blue	**793-5501/000-006**	
	gray	**793-5501/000-007**	
	orange	**793-5501/000-012**	
	light green	**793-5501/000-017**	
	green	**793-5501/000-023**	
	violet	**793-5501/000-024**	
			5

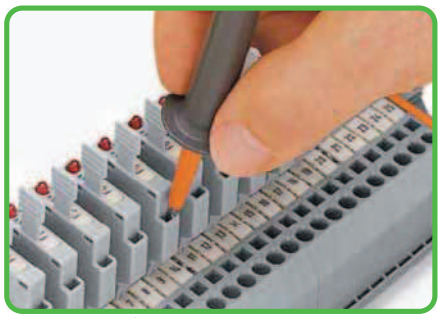

Using pluggable fuse holders with rail-mount terminal blocks for control circuit protection is highly advantageous for the user, as the function and the wiring are accomplished by two separate parts:

- No additional cost for assembly and wiring
- No risk of accidental contact with live parts during disconnection of fuse plug
- If exchanging a defective fuse, the fuse plug is completely separated from the carrier terminal block. This provides changeout away from current carrying parts.
- The fuse plug can be removed by service personnel, avoiding unintentional reclosing of the circuit by another person.
- Quickly exchange a fuse by using a prepared "stand-by plug."

The following fuse plug features provide quick and safe handling:

- Optional LED indicates blown fuse
- Markable fuse plug for clear coordination to the correct carrier terminal block
- Two touch-proof test slots
- High density with only 6 mm/0.236 in width of terminal block/fuse plug
- Instead of a fuse, a shorting link may be used as a disconnect plug.

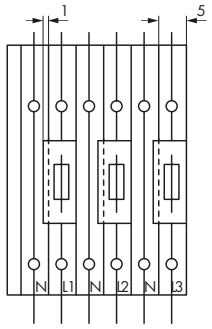

Open side of terminal block left

When corresponding Neutral-circuit is adjacent to a fuse plug, a 5 mm/0.197 in wide space saving terminal block may be used, as a 6 mm/0.236 in fuse plug may overlap the terminal block (see diagram below).
For 5 mm/0.197 in wide carrier terminal blocks, see page 232 (can be used with end plate, for example).

Fuse Plugs on Carrier Terminal Blocks 2.5 mm²
280 Series

Fuse plug 5 mm wide 125 V / I_N 5 A ❹ Plug width 5 mm / 0.197 in	Fuse plug 5 mm wide 125 V / I_N 5 A ❹ Plug width 5 mm / 0.197 in





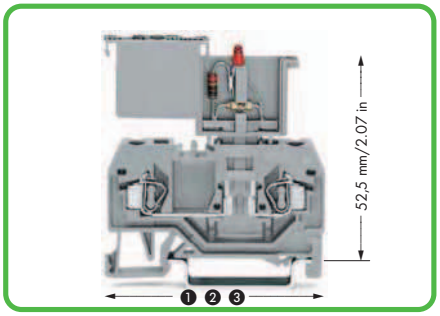

❶ 53 mm / 2.09 in for 280-916
❷ 64 mm / 2.52 in for 280-610
❸ 75 mm / 2.95 in for 280-816
For terminal blocks with side marking, see www.wagocatalog.com

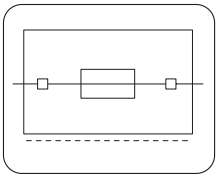

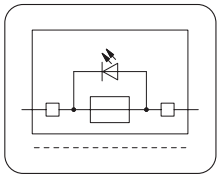

	Item No.	Pack. Unit
Fuse plug,		
with soldered miniature fuse,		
Nominal voltage and current are given by the fuse.		
5 mm wide		
◯ 250 mA FF	**280-850**	100
◯ 500 mA FF	**280-852**	100
◯ 1 A FF	**280-854**	100
◯ 2 A FF	**280-856**	100

	Item No.	Pack. Unit
Fuse plug,		
with soldered miniature fuse,		
with indicator lamp, additional LED,		
15 - 30 VDC. Nominal voltage and current are given by the LED or fuse. Leakage current in case of blown fuse: 5 - 20 mA		
5 mm wide		
◯ 250 mA FF	**280-850/281-413**	100
◯ 500 mA FF	**280-852/281-413**	100
◯ 1 A FF	**280-854/281-413**	100
◯ 2 A FF	**280-856/281-413**	100

Fuse Plug Accessories

Wire commoning chain, 50 connections,
insulated, I_N 8 A

blue **210-123** 1

WMB Multi marking system,

10 strips with 10 markers per card, stretchable 5 - 5.2 mm
plain **793-5501** 5

WMB Multi marking system, plain,

10 strips with 10 markers per card, stretchable 5 - 5.2 mm

yellow	**793-5501/000-002**	
red	**793-5501/000-005**	
blue	**793-5501/000-006**	
gray	**793-5501/000-007**	
orange	**793-5501/000-012**	
light green	**793-5501/000-017**	
green	**793-5501/000-023**	
violet	**793-5501/000-024**	

5

Accessories for Carrier terminal blocks

Appropriate marking system:
WMB (see Section 13)

2-conductor carrier terminal block,
❶ 0.08 - 2.5 mm² / AWG 28 - 14,

Terminal block width 5 mm / 0.197 in
gray **280-916** 100

End and intermediate plate, 2.5 mm thick


orange	**280-309**	100 (4x25)
gray	**280-308**	100 (4x25)

3-conductor carrier terminal block,
❷ 0.08 - 2.5 mm² / AWG 28 - 14,

Terminal block width 5 mm / 0.197 in
gray **280-610** 100

End and intermediate plate, 2.5 mm thick


orange	**280-326**	100 (4x25)
gray	**280-324**	100 (4x25)

4-conductor carrier terminal block,
❸ 0.08 - 2.5 mm² / AWG 28 - 14,

Terminal block width 5 mm / 0.197 in
gray **280-816** 100

End and intermediate plate, 2.5 mm thick


orange	**280-315**	100 (4x25)
gray	**280-314**	100 (4x25)

Comb-style jumper bar, insulated,

I_N = I_N terminal block

2-way	**280-482**	200 (8x25)
3-way	**280-483**	200 (8x25)

Comb-style jumper bar, insulated,

I_N = I_N terminal block

10-way	**280-490**	50 (2x25)

Alternate comb-style jumper bar,

insulated,
I_N = I_N terminal block
2-way **280-492** 200 (8x25)

Operating tool, of insulating material


2-way	**280-432**	1
3-way	**280-433**	1

Operating tool, of insulating material

10-way **280-440** 1

Wire commoning chain, 50 connections,

insulated, I_N 8 A
black **210-103** 1

For list of approvals and user guide, see pages 634 to 637.