SIEMENS

## Data sheet 3LD2704-0TK53



Figure similar

MAIN/EMERG. STOP SWITCH 3-POLE IU=100, P/AC-23A AT 400V=37KW FRONT MOUNTING FOUR-HOLE MOUNTING ROTARY ACTUATOR RED/YELLOW (EMERG. STOP)

| Model | | |
|---|---|---|
| **product brand name** | | SENTRON |
| **Product designation** | | Main and EMERGENCY-STOP switches |
| **Design of the operating mechanism** | | rotary actuator, red/yellow |
| **Type of the driving mechanism / motor drive** | | No |

| General technical data | | |
|---|---|---|
| **Number of poles** | | 3 |
| **Type of device** | | fixed mounting |
| **Protection against electrical shock** | | finger-safe |
| **Mechanical service life (switching cycles) / of the main contacts / typical** | | 100 000 |
| **Operating frequency / maximum** | 1/h | 50 |

| Voltage | | |
|---|---|---|
| Insulation voltage / Rated value | V | 690 |
| Surge voltage resistance / Rated value | V | 6 000 |

| Protection class | | |
|---|---|---|
| **Protection class IP** | | IP65 |

| Electricity | | |
|---|---|---|
| Continuous current / Rated value | A | 100 |
| Short-time current resistance (Icw) / at 690 V / limited to 1 s / Rated value | A | 2 000 |

| Main circuit | | |
|---|---|---|
| **Operating frequency** | | |
| • initial value | Hz | 50 |


Changes preserved
© Copyright Siemens AG

| | | |
|---|---|---|
| • Full-scale value | Hz | 60 |
| **Operating power** | | |
| • at AC-23 A / at 400 V / Rated value | kW | 37 |
| • at AC-23 A / at 690 V / Rated value | kW | 30 |
| • at AC-3 / at 400 V / Rated value | kW | 30 |
| • at AC-3 / at 690 V / Rated value | kW | 22 |
| **Operating voltage** | | |
| • with AC / at 50/60 Hz / Rated value | V | 690 |
| Operating current / at AC-21 / Rated value | A | 100 |

## Auxiliary circuit

| | | |
|---|---|---|
| Number of CO contacts / for auxiliary contacts | | 0 |
| **Number of NC contacts / for auxiliary contacts** | | 0 |
| **Number of NO contacts / for auxiliary contacts** | | 0 |
| **Operating voltage / of the auxiliary contacts / with AC / maximum** | V | 500 |
| **Continuous current / of the auxiliary contact / Rated value** | A | 10 |
| **Insulation voltage / of the auxiliary switch / Rated value** | V | 500 |

## Suitability

| | | |
|---|---|---|
| **Suitability for use** | | |
| • Main switch | | Yes |
| • switch disconnector | | Yes |
| • EMERGENCY OFF switch | | Yes |
| • safety switch | | Yes |
| • maintenance/repair switch | | Yes |

## Product details

| | | |
|---|---|---|
| Product feature / interlock | | Yes |
| Product expansion / optional | | |
| • motor drive | | No |
| • Voltage trigger | | No |

## Connections

| | | |
|---|---|---|
| **Connectable conductor cross-section** | | |
| • for main contacts | | |
| — single or multi-stranded / minimum | mm² | 4 |
| — single or multi-stranded / maximum | mm² | 50 |
| — finely stranded / with core end processing / maximum | mm² | 35 |
| — stranded / minimum | mm² | 4 |
| — stranded / maximum | mm² | 50 |
| • for auxiliary contacts | | |


Changes preserved
© Copyright Siemens AG

| | | |
|---|---|---|
| — single or multi-stranded / minimum | mm² | 0.75 |
| — single or multi-stranded / maximum | mm² | 4 |
| — finely stranded / with core end processing / minimum | mm² | 0.75 |
| — finely stranded / with core end processing / maximum | mm² | 2.5 |
| — stranded / minimum | mm² | 0.75 |
| — stranded / maximum | mm² | 4 |
| Type of connectable conductor cross-section | | |
| • for main contacts / finely stranded / with core end processing | | 35 |
| • for auxiliary contacts | | |
| — solid | | 50 |
| — finely stranded / with core end processing | | 2x (0.75 ... 1.5 mm2), 1x 2.5 mm2 |
| **Type of electrical connection** | | |
| • for main current circuit | | connection terminals |
| • for auxiliary contacts | | connection terminals |

## Requirements

| | | |
|---|---|---|
| **Design of the fuse link** | | |
| • for short-circuit protection of the main circuit / required | | fuse gL/gG: 100 A |
| • for short-circuit protection of the auxiliary switch / required | | fuse gL/gG: 10 A |

## Mechanical Design

| | | |
|---|---|---|
| **Height** | mm | 107 |
| **Width** | mm | 90 |
| **Depth** | mm | 112.5 |
| **Mounting type** | | front mounting |
| **Mounting type** | | |
| • front mounting | | Yes |
| • front mounting with 4-hole attachment | | Yes |
| • front mounting with central attachment | | No |
| • Side-by-side mounting | | Yes |
| • rail mounting | | No |
| **Net weight** | g | 497 |

## Environmental conditions

| | | |
|---|---|---|
| **Ambient temperature** | | |
| • during operation / minimum | °C | -25 |
| • during operation / maximum | °C | 55 |

## Certificates

| | | |
|---|---|---|
| **Equipment marking** | | |


Changes preserved
© Copyright Siemens AG

| | |
|---|---|
| • acc. to DIN EN 61346-2 | S |

## General Product Approval

CCC CSA GOST UL VDE

| General Product Approval | Declaration of Conformity | Test Certificates | Shipping Approval | | other |
|---|---|---|---|---|---|
| other | EG-Konf. | Special Test Certificate | GL | LRS | Environmental Confirmations |

## Further information

**Information- and Downloadcenter (Catalogs, Brochures,…)**
http://www.siemens.com/lowvoltage/catalogs

**Industry Mall (Online ordering system)**
https://eb.automation.siemens.com/mall/en/WW/Catalog/Product/3LD27040TK53

**Service&Support (Manuals, Certificates, Characteristics, FAQs,...)**
http://support.automation.siemens.com/WW/view/en/3LD27040TK53/all

**Image database (product images, 2D dimension drawings, 3D models, device circuit diagrams, ...)**
http://www.automation.siemens.com/bilddb/cax_en.aspx?mlfb=3LD27040TK53

**CAx-Online-Generator**
http://www.siemens.com/cax

**Tender specifications**
http://ausschreibungstexte.siemens.com/tiplv


Changes preserved
© Copyright Siemens AG

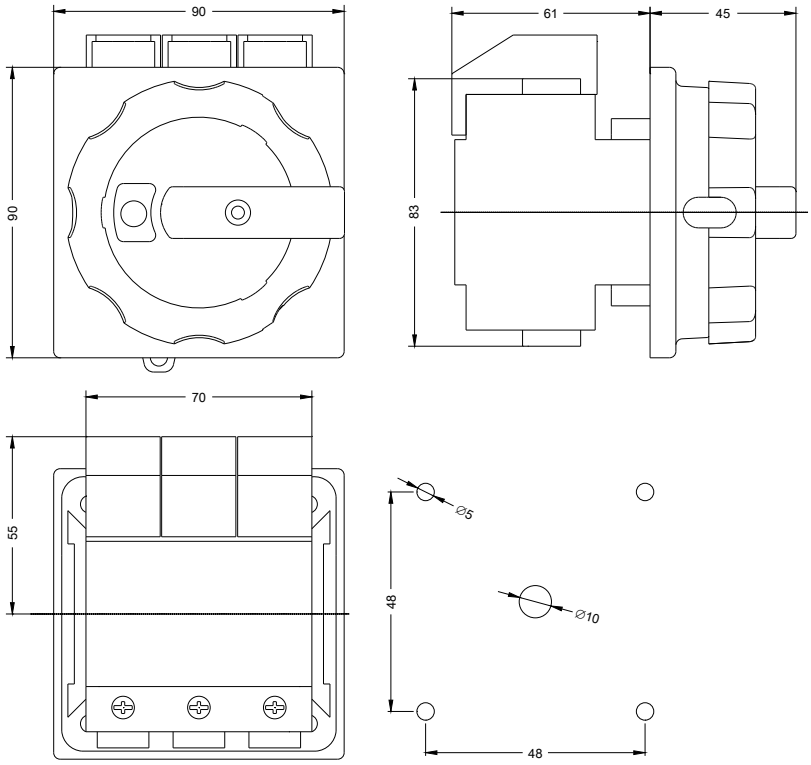


**last modified:** 05.05.2015


Changes preserved
© Copyright Siemens AG