Karta danych technicznych
Wiring trunking, type LK4/N 60100

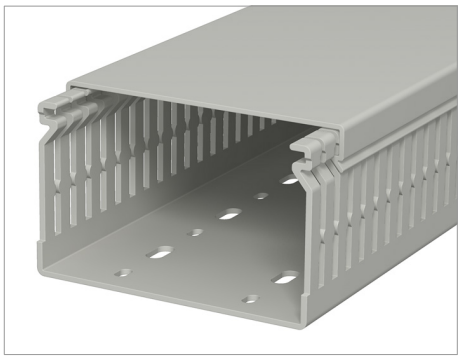

Wiring duct including cover and base perforation, tapering in the side slots stop the cables from falling out.

Type	Colour	Length mm	Dimension bxh mm	Pack. m	Weight kg/100 m	Nr kat.
LK4 N 60100	Stone grey; RAL 7030	2000	100x60	16	105.500	6178211

PVC Polyvinylchloride /m

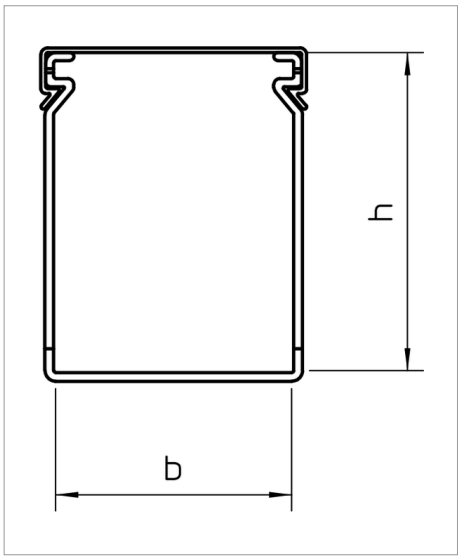

Legenda

Communautés Européennes, EC declaration of conformity according to EC directives

Underwriters Laboratories Inc., USA + CSA, Canada

Verband der Elektrotechnik, Elektronik, Informationstechnik e.V., Germany