6


P. 82


P. 83


P. 83


P. 84


P. 84


P. 85

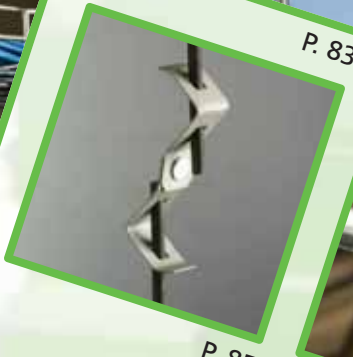
P. 85

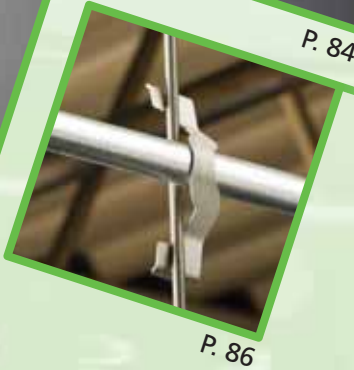
P. 86

ATA / ATS

		Fig. #	Ø	P	
170400	ATA41	1	M6	P21	100
170420	ATS41	2	M6	P21	100

ATA

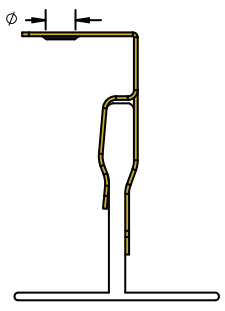

ATS

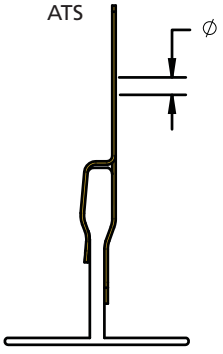







Fig. #1



Fig. #2

MATA / MATS

		Fig. #	Ø A (mm)	P	
177190	812MATA	1	18 - 30	P21	100
177200	812MATS	2	18 - 30	P21	100

MATA

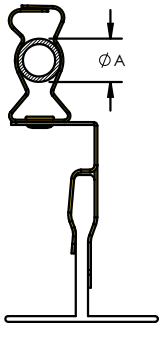

MATS

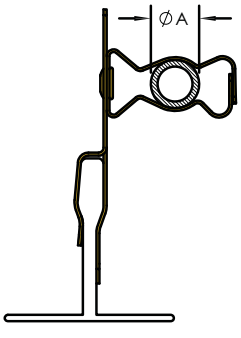







Fig. #1



Fig. #2

512

		B (mm)	P		
190440	512600MM	600	P21	50	80 N

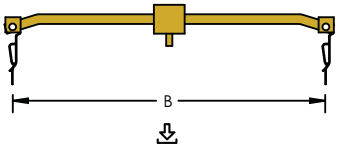

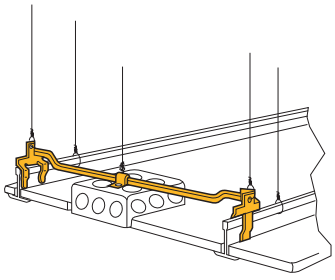





TGE

		A (mm)	P	
170510	TGE	6	P21	100

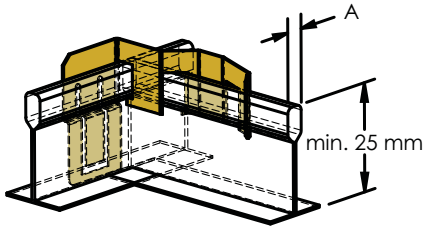





IDSM

		A (mm)	B (mm)	P		
173460	IDSM16	1.5	24 - 26	P21	100	290 N

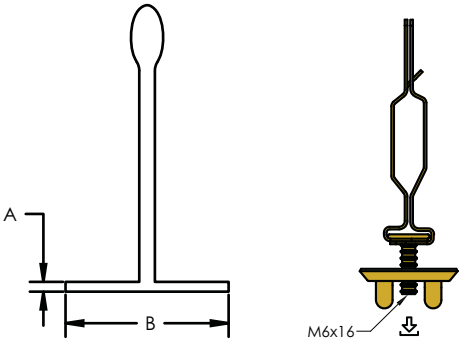



4J

		A (mm)	B (mm)	P		
170290	4J2438	3.0	38 - 60	P21	100	600 N

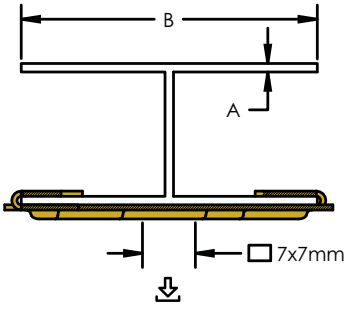



4J-SM

		A (mm)	B (mm)	P		
176780	4J2438SM	3.0	38 - 60	P21	100	600 N

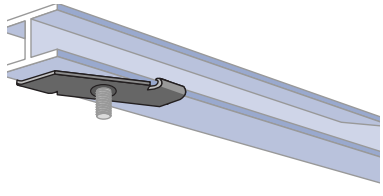

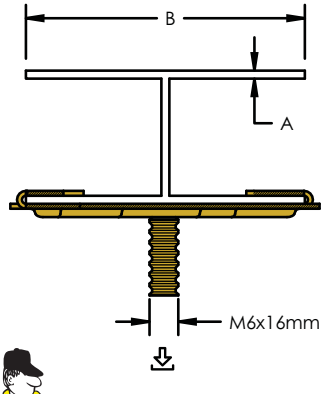



4TGS

		A (mm)	P	
179840	4TGS	6.4	P21	100

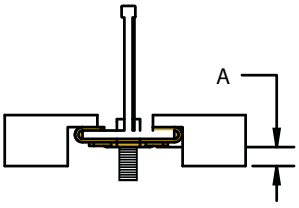

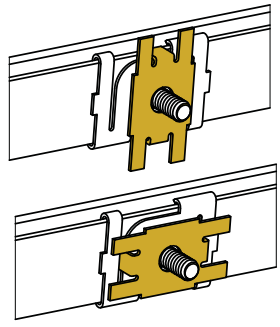

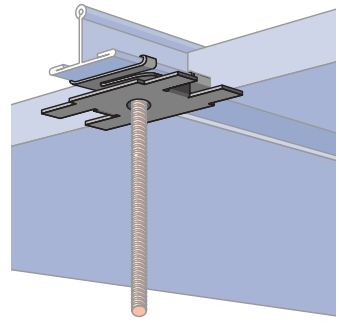



4G16H

		A (mm)	B (mm)	Ø (mm)	P		
170230	4G16H	1.5	24 - 26	6.4	P21	100	180 N
576950	4G16H-6	1.5	24 - 26	6.4	P6.1	100	180 N

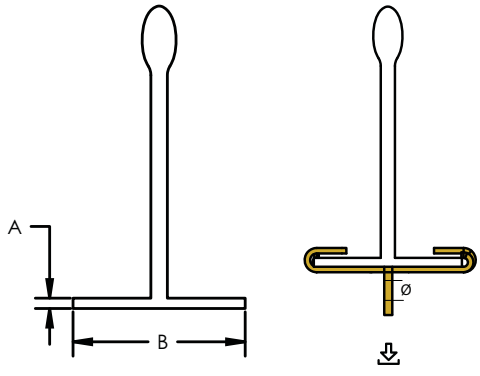

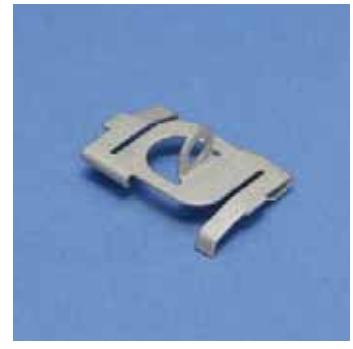

4G24H

		A (mm)	B (mm)	Ø (mm)			
P21							
170490	4G24H	1.5	24 - 26	6.4	100	-	180 N
P6.1							
170500	4G24H-6	1.5	24 - 26	6.4	100	-	180 N
172280	4G24H-6	1.5	24 - 26	6.4	250	10x25	180 N

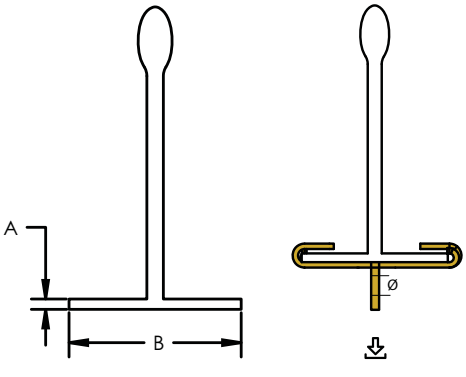



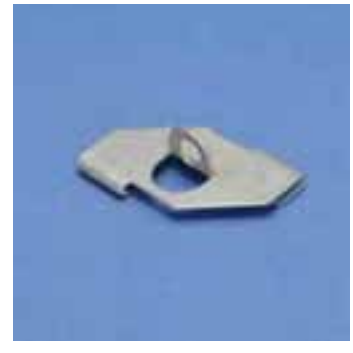

4G16M

		A (mm)	B (mm)	M (mm)		
P21						
178590	4G16M7	1.5	24 - 26	6 x 7	100	220 N
178600	4G16M11	1.5	24 - 26	6 x 11	100	220 N
171900	4G16M16	1.5	24 - 26	6 x 16	100	220 N
176880	4G16M25	1.5	24 - 26	6 x 25	100	220 N
171890	4G16M38	1.5	24 - 26	6 x 38	100	220 N
171870	4G16M51	1.5	24 - 26	6 x 51	100	220 N
171880	4G16M76	1.5	24 - 26	6 x 76	100	220 N
P6.1						
178620	4G16M11	1.5	24 - 26	6 x 16	100	220 N
576940	4G16M16	1.5	24 - 26	6 x 16	100	220 N

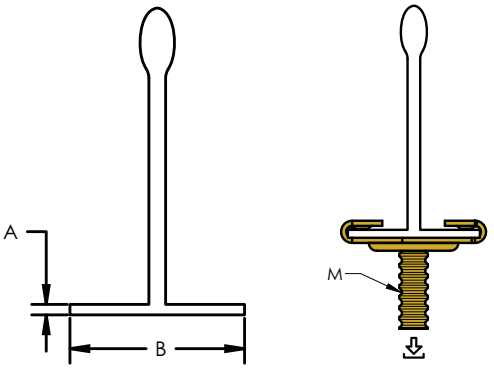





4G24M

		A (mm)	B (mm)	M (mm)			
P21							
171680	4G24M11	1.5	24 - 26	6 x 11	100	-	220 N
171710	4G24M16	1.5	24 - 26	6 x 16	100	-	220 N
171730	4G24M25	1.5	24 - 26	6 x 25	100	-	220 N
171820	4G24M38	1.5	24 - 26	6 x 38	100	-	220 N
171830	4G24M51	1.5	24 - 26	6 x 51	100	-	220 N
172450	4G24M16	1.5	24 - 26	6 x 16	250	10x25	220 N
P6.1							
171840	4G24M11-6	1.5	24 - 26	6 x 11	100	-	220 N
171860	4G24M16-6	1.5	24 - 26	6 x 16	100	-	220 N
171910	4G24M25-6	1.5	24 - 26	6 x 25	100	-	220 N
171920	4G24M38-6	1.5	24 - 26	6 x 38	100	-	220 N
171940	4G24M51-6	1.5	24 - 26	6 x 51	100	-	220 N
172290	4G24M16-6	1.5	24 - 26	6 x 16	250	10x25	220 N
172300	4G24M25-6	1.5	24 - 26	6 x 25	250	10x25	220 N
172310	4G24M38-6	1.5	24 - 26	6 x 38	250	10x25	220 N

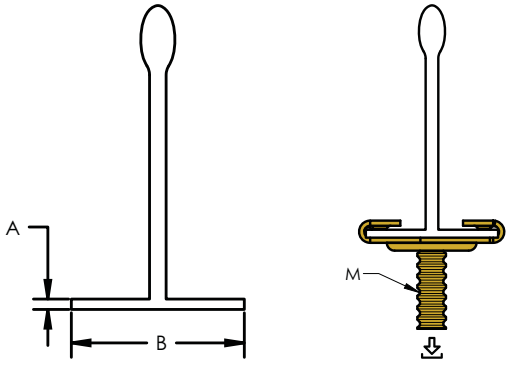





4G24WN

		A (mm)	B (mm)	M (mm)	P		
160290	4G24WN	24 - 26	1.5	6 x 16	P21	100	220 N

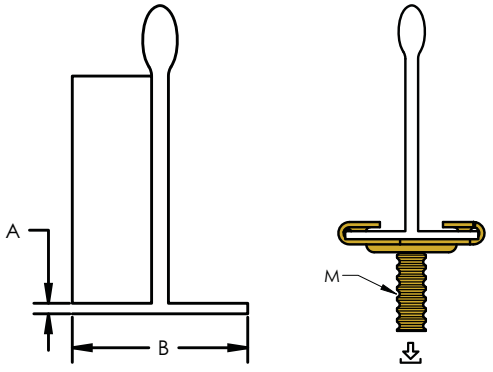





6WN

		A (mm)	M	P			
171560	6WN	32	M6	P21	100	-	450 N
172410	6WN	32	M6	P21	250	10x25	450 N

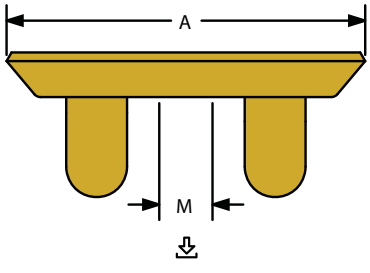



Z

		Ø	D (mm)	P	
170650	4Z34	M4-M8	6.5	P21	100
170720	6Z34	M8-M12	6.5	P21	100

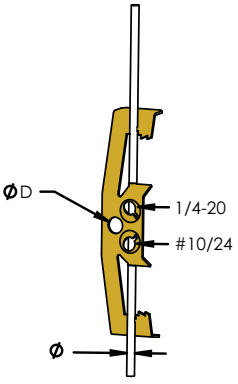

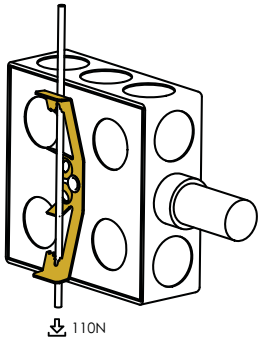

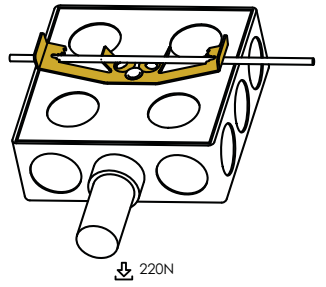





Z-M

		Ø 1 (mm)	Ø 2	P		
171050	4Z346M	14-18	M4-M8	P21	100	110 N
171060	4Z34812M	18-30	M4-M8	P21	100	110 N
171080	6Z346M	14-18	M8-M12	P21	100	110 N
171090	6Z34812M	18-30	M8-M12	P21	100	110 N

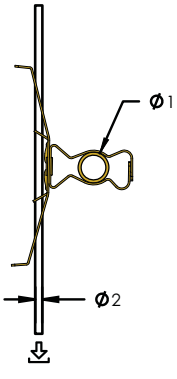

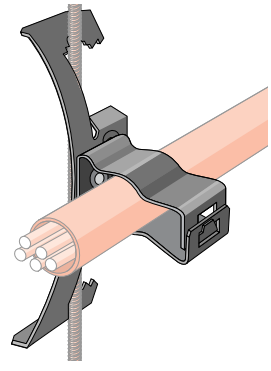



Z-CTS

		Ø	P		
172950	4Z34CTS	M4 - M8	P21	50	110 N
172960	6Z34CTS	M8 - M12	P21	50	110 N

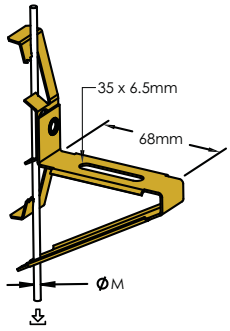

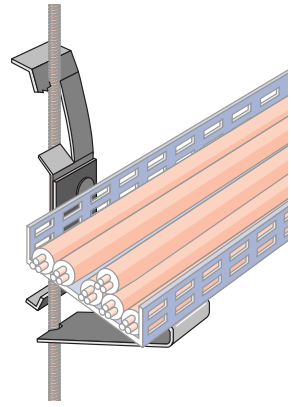



6Z34TFB

		M	P		
171160	6Z34TFB	M10	P21	25	300 N

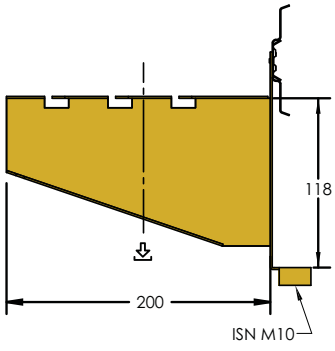



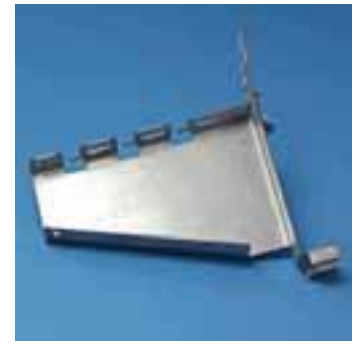

PCS1

		Ø 1 (mm)	Ø 2 (mm)	P			SF
170880	PCS1	2-4	11-14	P21	100	110 N	3:1

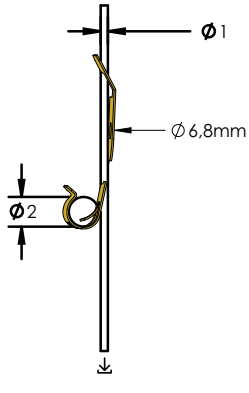





PCS1-M

		Ø 1 (mm)	Ø 2 (mm)	Ø 3 (mm)	P			SF
171000	6MPCS1	2-4	11-14	14 - 18	P21	50	110	3:1
170990	812MPCS1	2-4	11-14	18 - 30	P21	50	110	3:1

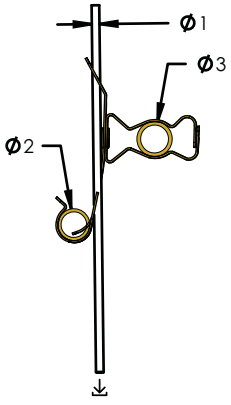



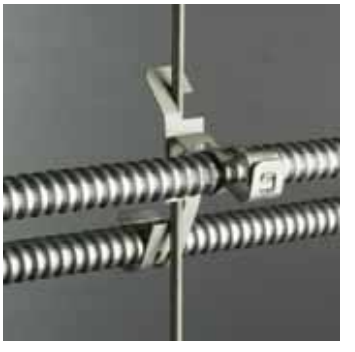

PCS2

		Ø 1 (mm)	Ø 2 (mm)	P			SF
170881	PCS2	2-4	17-22	P21	100	110 N	3:1







MA/MA

		Ø	P		
173200	M6MAM6	M6	P21	100	600 N
173210	M8MAM8	M8	P21	100	700 N
173220	M10MAM10	M10	P21	100	700 N

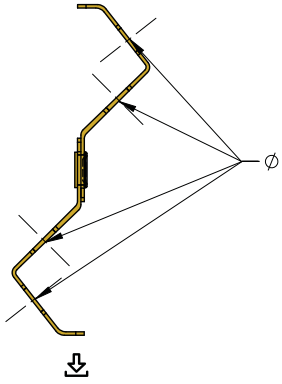

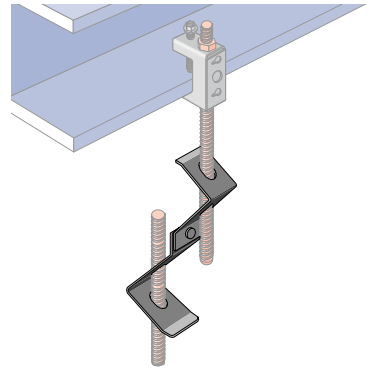





K

		ØA (mm)	Ø B	P		N1
170870	KX	4-12	M4-M6	P21	100	220 N
170660	K8	8-18	M4-M6	P21	100	220 N
170670	K12	18-24	M4-M6	P21	100	220 N
170670	K12	16-22	M8-M10	P21	100	220 N
170670	K12	14-20	M12	P21	100	220 N
170680	K16	26-30	M4-M6	P21	100	220 N
170680	K16	24-26	M8-M10	P21	100	220 N
170680	K16	22-24	M12	P21	100	220 N
170690	K20	30-42	M4-M6	P21	100	220 N
170690	K20	25-38	M8-M10	P21	100	220 N
170690	K20	20-36	M12	P21	100	220 N

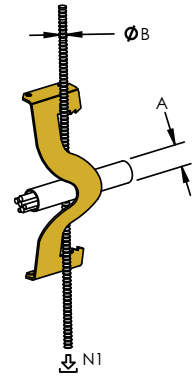



		ØA (mm)	B	P		N2
170870	KX	6-12	3-5	P21	100	110 N
170660	K8	3-7	12-16	P21	100	110 N
170670	K12	3-7	16-22	P21	100	110 N
170670	K12	8-10	14-20	P21	100	110 N
170670	K12	11-13	12-19	P21	100	110 N
170680	K16	3-7	24-28	P21	100	110 N
170680	K16	8-10	20-26	P21	100	110 N
170680	K16	11-13	19-24	P21	100	110 N
170690	K20	3-7	28-40	P21	100	110 N
170690	K20	8-10	26-38	P21	100	110 N
170690	K20	11-13	21-35	P21	100	110 N

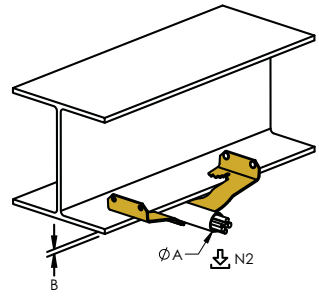



AB

		Ø (mm)	P		
171120	AB	7	P21	100	700 N



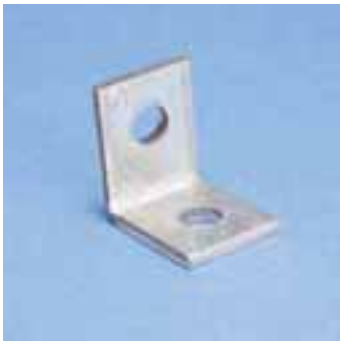

TI/T

		Ø1	Ø2 (mm)	P		
174800	M6Ti	M6	11x15	P21	100	700 N
170900	M8Ti	M8	11x15	P21	100	700 N
170910	M10Ti	M10	11x15	P21	100	700 N
160260	T10	11 mm	11x15	P21	100	700 N

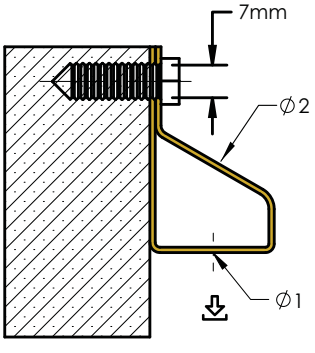





B-TI/T

		Ø1	Ø2 (mm)	P		
174850	M6TiB	M6	11x15	P21	100	700 N
174940	M8TiB	M8	11x15	P21	100	700 N
175030	M10TiB	M10	11x15	P21	100	700 N
160280	T10B	11 mm	11x15	P21	100	700 N

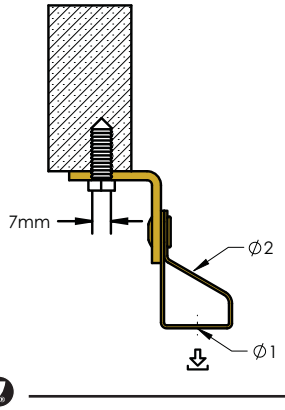





MAB

		Ø	P		
173430	M6MAB	M6	P21	100	600 N
173440	M8MAB	M8	P21	100	700 N
173450	M10MAB	M10	P21	100	700 N

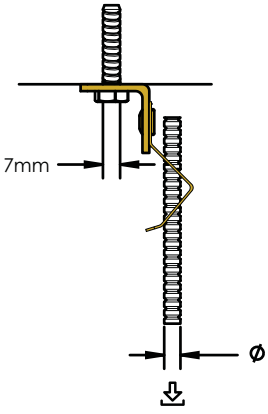





CD-B

		Ø 1 (mm)	Ø 2 (mm)	P		
181140	CD0B	7	17-22	P1	100	70 N
181150	CD2B	7	25-33	P1	100	70 N
181190	CD1B	7	19-25	P1	100	70 N
181370	CD2,5B	7	31-38	P1	100	70 N
181380	CD3B	7	36-43	P1	100	70 N
181390	CD4B	7	40-47	P1	50	70 N
181470	CD5B	7	50-60	P1	50	70 N
181480	CD6B	8	66-76	P1	25	70 N
181490	CD7B	8	80-90	P1	25	70 N
181500	CD8B	8	95-105	P1	10	70 N
181540	CD9B	8	108-115	P1	10	70 N



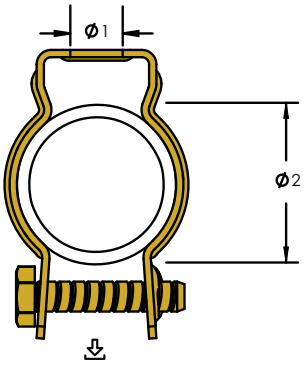





M

		Ø (mm)		1	2
P21					
170790	6M	14-18	100	440	110
177130	812M	18-30	100	440	110
170100	16M	30-35	100	440	110
170110	20M	35-42	100	440	110
170120	24M	45-50	100	440	110
170130	32M	50-60	100	440	110
P2					
179900	8M-2	18-22	100	440	110
179910	12M-2	22-30	100	440	110



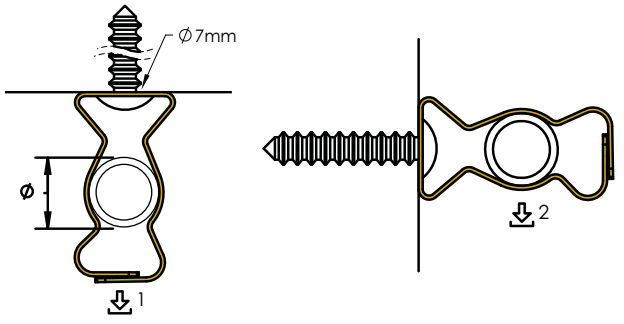





P

		Ø (mm)	P		1	2
171130	8P	18 - 22	P21	100	110	65
171150	12P	22 - 30	P21	100	110	65
171170	16P	30 - 35	P21	100	110	65





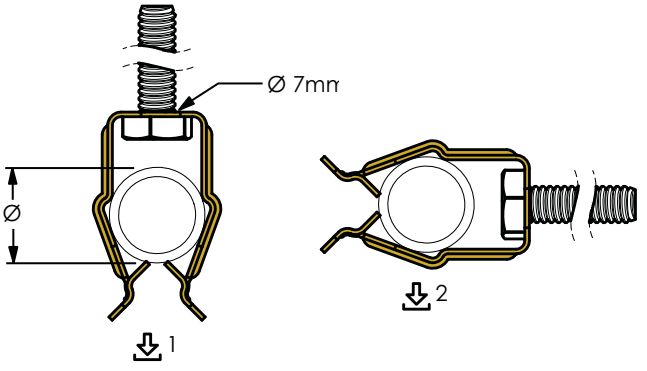

P-P

		P		Ø1	Ø2
171220	8P8P	P21	100	18-22	18-22
171230	8P12P	P21	100	18-22	22-30
171240	8P16P	P21	100	18-22	30-35
171250	12P12P	P21	100	22-30	22-30
171260	12P16P	P21	100	22-30	30-35
171270	16P16P	P21	100	30-35	30-35

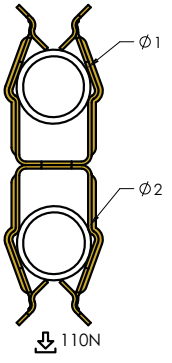





CT

		P		
170450	CT	P21	100	40 N
171600	CT-2	P2	100	40 N

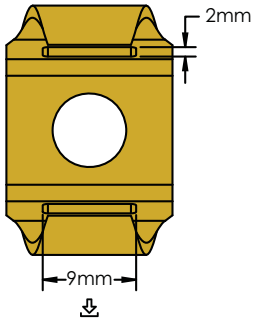

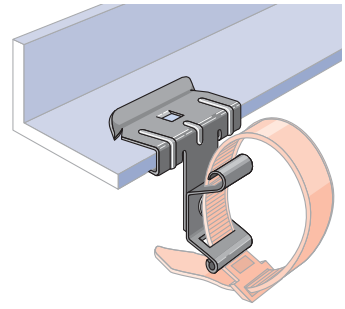



TSGB

		L (mm)	P	
187190	TSGB16	280 - 458	P1	50
187191	TSGB24	432 - 660	P1	50

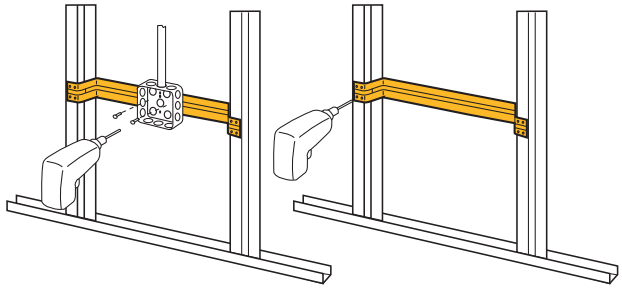





TPC

		Ø (mm)	P	
187192	TPC112	9 - 28	P5	50
187193	TPC238	16 - 61	P5	50

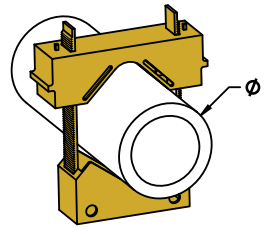





SMS8

		L (mm)	M (mm)	P	
187197	SMS8	12.0	4	P1	1000



CS812

		Ø (mm)	P	
176910	CS812	18-30	P21	100

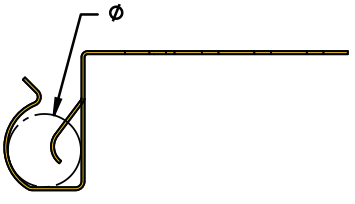

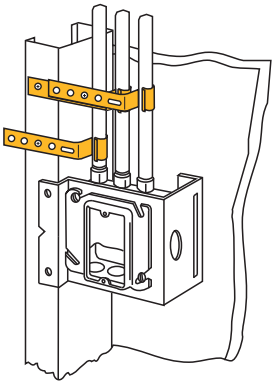





304B2

		A (mm)	B (mm)	P	
187991	304B2	38	80	P21	100

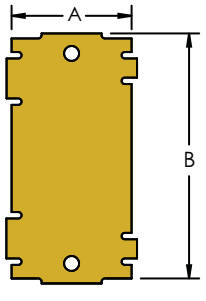





MSP20

188480	MSP20	1





ESG1

		Ø (mm)	P	
188470	ESG1	33	P13	100

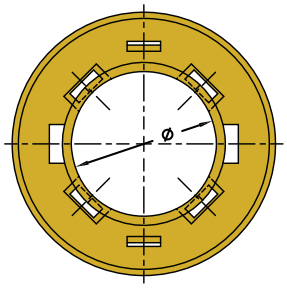

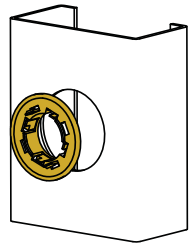

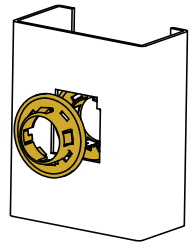

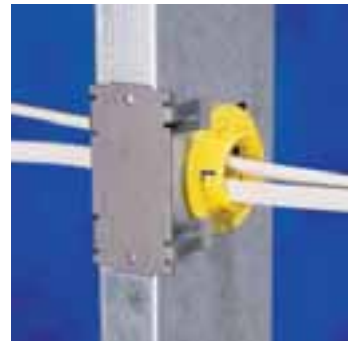



J1A35

		A (mm)	P	
160883	J1A35	63-89	P21	100

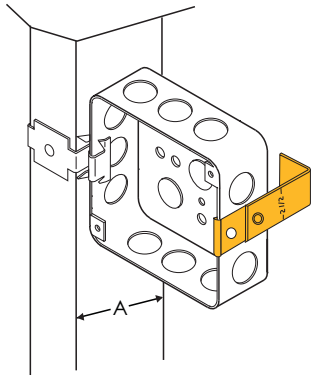

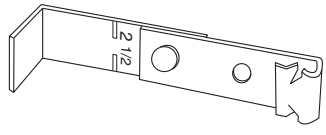





812MF

		A (mm)	Ø (mm)	P	
160881	812MF	35-38	18-30	P21	100

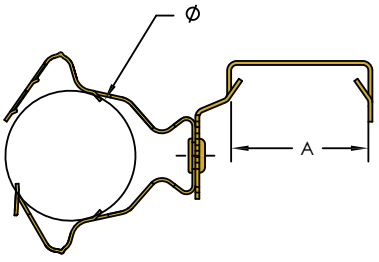



MFSE

		A (mm)	B (mm)		P
160991	MFSE	35 - 38	6.35 - 19.05	100	P21

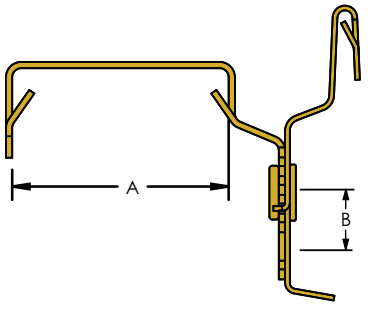

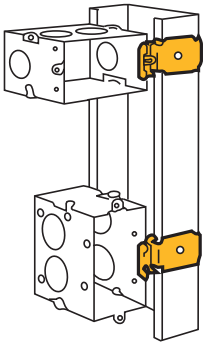





FBS

		H1 (mm)	H2 (mm)	Ø	P	
176990	FBS18	457	210	4.7	P1	50

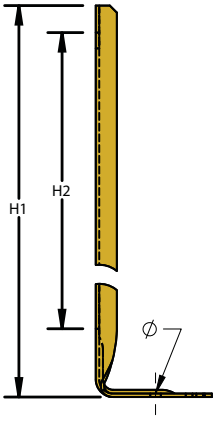

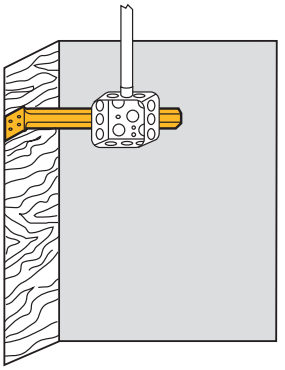

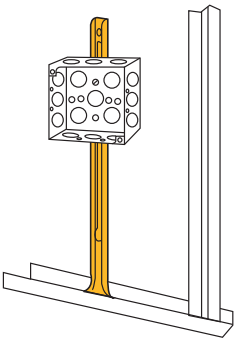



FXC20

		A (mm)	Ø (mm)	P	
160885	FXC20	35 - 38	11-13.5	P21	100

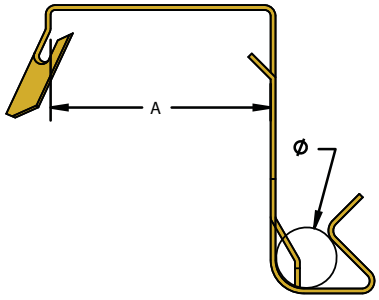

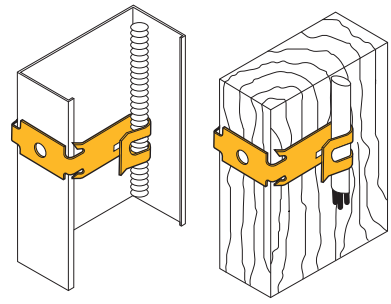



WC812

		Ø 1 (mm)	Ø 2 (mm)	P	
160890	WC812	18-30	7	P21	100

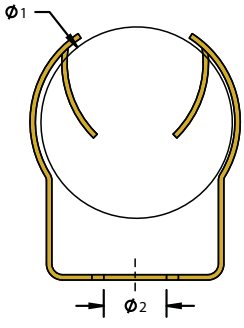





CADDY® SUPERKLIP

		A (mm)	B (mm)	C (mm)	P		
389017	CADDY® SUPERKLIP 8 mm	8 - 10	17	26	P10	100	165 N
389018	CADDY SUPERKLIP 10 mm	10 - 12	17	26	P10	100	180 N
389001	CADDY SUPERKLIP 12 mm	12 - 14	17	30	P10	100	200 N
389002	CADDY SUPERKLIP 15 mm	14 - 17	20	32	P10	100	220 N
389003	CADDY SUPERKLIP 17 mm	17 - 20	20	35	P10	100	235 N
389004	CADDY SUPERKLIP 20 mm	20 - 22	20	39	P10	100	250 N
389005	CADDY SUPERKLIP 22 mm	22 - 25	20	42	P10	100	270 N
389006	CADDY SUPERKLIP 25 mm	25 - 28	20	45	P10	50	300 N
389007	CADDY SUPERKLIP 28 mm	28 - 31	20	49	P10	50	320 N
389008	CADDY SUPERKLIP 32 mm	31 - 36	21	54	P10	50	370 N
389009	CADDY SUPERKLIP 36 mm	36 - 40	21	59	P10	50	400 N
389011	CADDY SUPERKLIP 40 mm	40 - 44	21	64	P10	25	440 N
389012	CADDY SUPERKLIP 47 mm	47 - 51	22	73	P10	25	470 N
389013	CADDY SUPERKLIP 51 mm	51 - 56	23	79	P10	25	500 N
389014	CADDY SUPERKLIP 59 mm	59 - 64	23	88	P10	20	540 N

