Karta danych technicznych
Internal corner hood

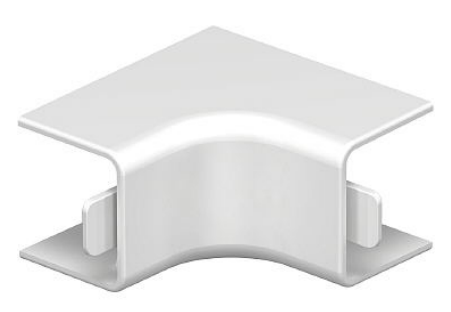

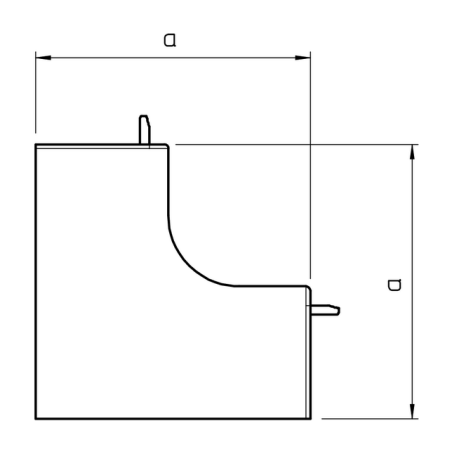

Internal corner cover for changing the direction of the WDK trunking.

Type	Colour	Dimension a mm	Pack. pcs	Weight kg/100 pcs.	Nr kat.
WDK HI20020RW	Pure white; RAL 9010	38.5	4	0.600	6191878
WDK HI20020CW	Cream; RAL 9001	38.5	4	0.600	6160018
WDK HI20020LGR	Light grey; RAL 7035	38.5	4	0.600	6182011
WDK HI20020GR	Stone grey; RAL 7030	38.5	4	0.600	6158226

PVC Polyvinylchloride /pc.

CE

Legenda

CE Communautés Européennes, EC declaration of conformity according to EC directives