Karta danych technicznych
Flat angle hood



Flat angle cover for changing the direction of the WDK trunking.

Type	Colour	Dimension a mm	Pack. pcs	Weight kg/100 pcs.	Nr kat.
WDK HF60090RW	Pure white; RAL 9010	129	2	11.500	6192920
WDK HF60090CW	Cream; RAL 9001	129	2	11.500	6161510
WDK HF60090LGR	Light grey; RAL 7035	129	2	11.500	6183417
WDK HF60090GR	Stone grey; RAL 7030	129	2	11.500	6022316

PVC Polyvinylchloride /pc.

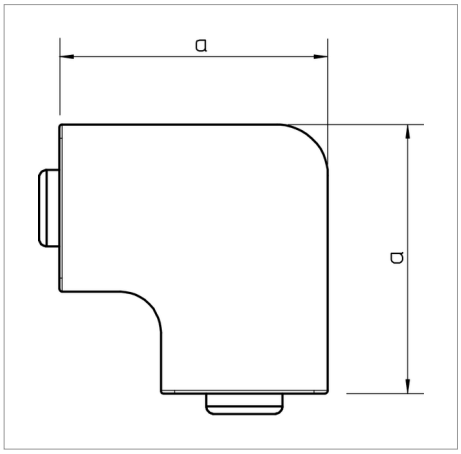

CE

Legenda

CE Communautés Européennes, EC declaration of conformity according to EC directives