Karta danych technicznych
Internal corner hood

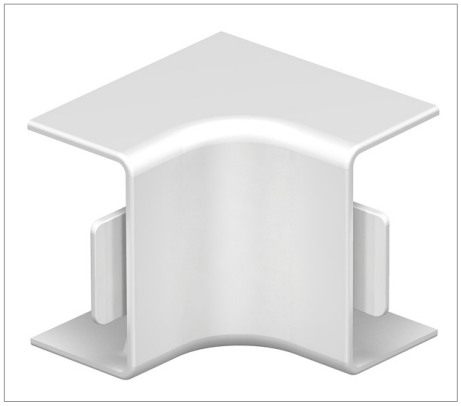

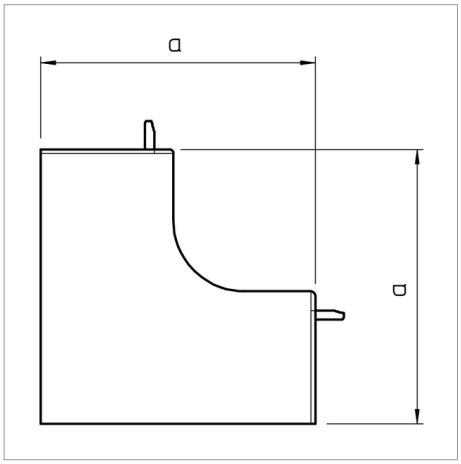

Internal corner cover for changing the direction of the WDK trunking.

Type	Colour	Dimension a mm	Pack. pcs	Weight kg/100 pcs.	Nr kat.
WDK HI15030RW	Pure white; RAL 9010	38.5	4	0.840	6191843
WDK HI15030CW	Cream; RAL 9001	38.5	4	0.840	6160026
WDK HI15030GR	Stone grey; RAL 7030	38.5	4	0.840	6158234

PVC Polyvinylchloride /pc.

CE

Legenda

CE Communautés Européennes, EC declaration of conformity according to EC directives