# 880 Series Features

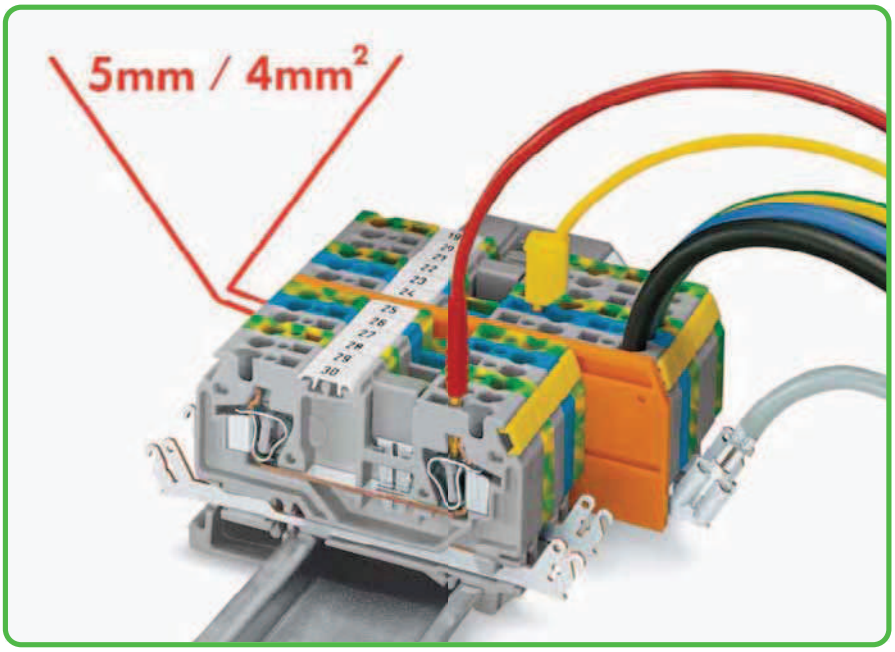


With/without shield contact

**Features**
- 2-, 3- and 4-conductor terminal blocks, only 5 mm/0.197 in wide
- Conductor cross section up to 4 mm² (per VDE 0281), or
  * AWG 12 with ferrule (Item No. 216-206)
  * 2.5 mm²/AWG 14 with rubber-insulated conductors having a diameter up to 4.4 mm (0.173 in)
- Shield contact, solder contact /quick-connect contact 6.3 (2 x 2.8) mm
- Test plug, red, 2 mm Ø
- Test plug, yellow, 2.3 mm Ø
- WMB marking
- Miniature WSB marking, on both sides
- Commoning with standard WAGO jumper system

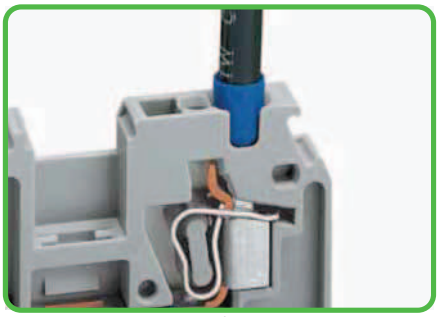

Using a AWG 12 cable with ferrule
(Item No. 216-206)

❶ 800 V = rated voltage
8 kV = rated surge voltage
3 = pollution degree
cULus 600 V/20 A
with shield contact
400 V/6 kV/3
cULus 300 V/10 A
(also see Section 14)

❷ Strip length, see packaging or instructions.

❸ Suitable for Ex i applications

❹ See application notes for:
Test plug modules, pages 194 – 196
Banana plug, page 198
Insulation stop, page 199
Comb-style jumper bar, page 200
Operating tool, page 200
Staggered jumper, page 201
Push-in type wire jumper, page 201

## 880 Series Accessories

| | | | |
|---|---|---|---|
| **Test plug,** | | | |
|  | with 500 mm cable, 2.3 mm Ø | | |
| | yellow | **210-137** | 50 |
| **Test plug,** | | | |
|  | with 500 mm cable, 2 mm Ø | | |
| | red | **210-136** | 50 |
| **Test plug adapter,** 5 mm wide, | | | |
|  | for terminal blocks 1.5 - 4 mm², for 210-137 test plug 2.3 mm Ø | | |
| | gray | **280-404** | 100 (4x25) |
| **Test plug adapter,** 8.3 mm wide, | | | |
|  | for terminal blocks 1.5 - 10 mm², for test plug 4 mm Ø | | |
| | gray | **209-170** | 50 (2x25) |
| **Banana plug,** | | | |
|  | ❹ for socket 4 mm Ø, color mixed | | |
| | | **215-111** | 50 |
| **Test plug adapter,** 6 mm wide, | | | |
|  | with CAGE CLAMP®, for 0.08 - 2.5 mm² | | |
| | $I_N$ 24 A | **281-407** | 100 (4x25) |
| **WMB Inline,** plain, | | | |
|  | stretchable 5 - 5.2 mm, 1,500 WMB markers, 5 mm, on roll | | |
| | white | **2009-115** | 1 |
| **WMB Multi marking system,** | | | |
|  | 10 strips with 10 markers per card, stretchable 5 - 5.2 mm | | |
| | plain | **793-5501** | 5 |
| **Miniature WSB Quick marking system,** | | | |
|  | 10 strips with 10 markers per card, 5 mm wide markers | | |
| | plain | **248-501** | 5 |
| **Screwless end stop,** | | | |
|  | for DIN 35 rail, 6 mm wide | | |
| | gray | **249-116** | 100 (4x25) |
| **Screwless end stop,** | | | |
|  | for DIN 35 rail, 10 mm wide | | |
| | gray | **249-117** | 50 (2x25) |

# Through/Ground Conductor/Shield and Ex Terminal Blocks 4 mm²
# 281 Series

| | | |
|---|---|---|
| 0.08 - 4 mm² | AWG 28 - 12 | |
| 800 V/8 kV/3 ❶ | 600 V, 20 A | |
| $I_N$ 32 A | 600 V, 25 A | |
| Terminal block width 6 mm / 0.236 in | | |
| 9 - 10 mm / 0.37 in ❷ | | |

| | | |
|---|---|---|
| 0.08 - 4 mm² | AWG 28 - 12 | |
| 800 V/8 kV/3 ❶ | 600 V, 20 A | |
| $I_N$ 32 A | 600 V, 25 A | |
| Terminal block width 6 mm / 0.236 in | | |
| 9 - 10 mm / 0.37 in ❷ | | |

| | | |
|---|---|---|
| 0.08 - 4 mm² | AWG 28 - 12 | |
| 800 V/8 kV/3 ❶ | 600 V, 20 A | |
| $I_N$ 26 A | 600 V, 25 A | |
| Terminal block width 6 mm / 0.236 in | | |
| 9 - 10 mm / 0.37 in ❷ | | |

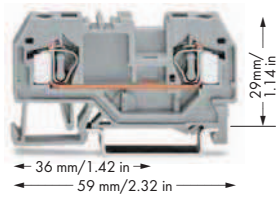


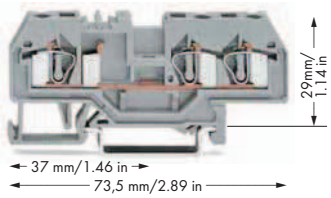


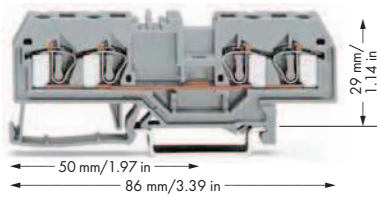


| | Item No. | Pack. Unit |
|---|---|---|
| **2-conductor through terminal block** | | |
| gray | **281-901** | 50 |
| blue | **281-904** ❸ | 50 |
| orange | **281-902** | 50 |
| red | **281-903** | 50 |
| black | **281-905** | 50 |
| yellow | **281-906** | 50 |
| light gray Ex | **281-992** ❹ | 50 |
| **2-conductor ground terminal block** | | |
| green-yellow | **281-907** | 50 |
| green-yellow Ex | **281-907/999-950** ❹ | 50 |
| **Other terminal blocks with the same profile:** | | |
| Diode | **281-915/281-410** | Page 258 |
| Disconnect | **281-912** | Page 208 |
| Carrier | **281-916** | Page 230 |

| | Item No. | Pack. Unit |
|---|---|---|
| **3-conductor through terminal block** | | |
| gray | **281-681** | 50 |
| blue | **281-684** ❸ | 50 |
| orange | **281-678** | 50 |
| red | **281-679** | 50 |
| black | **281-685** | 50 |
| yellow | **281-686** | 50 |
| light gray Ex | **281-993** ❹ | 50 |
| **3-conductor ground terminal block** | | |
| green-yellow | **281-687** | 50 |
| green-yellow Ex | **281-687/999-950** ❹ | 50 |
| **Other terminal blocks with the same profile:** | | |
| Diode | **281-673/281-410** | Page 258 |
| Disconnect | **281-683** | Page 208 |
| Carrier | **281-610** | Page 230 |

| | Item No. | Pack. Unit |
|---|---|---|
| **4-conductor through terminal block** | | |
| gray | **281-652** | 50 |
| blue | **281-654** ❸ | 50 |
| orange | **281-653** | 50 |
| red | **281-663** | 50 |
| black | **281-664** | 50 |
| yellow | **281-668** | 50 |
| light gray Ex | **281-994** ❹ | 50 |
| **4-conductor ground terminal block** | | |
| green-yellow | **281-657** | 50 |
| green-yellow Ex | **281-657/999-950** ❹ | 50 |
| **4-conductor shield terminal block** | | |
| white | **281-658** | 50 |
| **Other terminal blocks with the same profile:** | | |
| Diode | **281-665/281-410** | Page 258 |
| Disconnect | **281-659** | Page 208 |
| Disc., test & meas. | **281-666** | Page 208 |
| Carrier | **281-656** | Page 230 |

## Item-Specific Accessories

| | | | |
|---|---|---|---|
| **End and intermediate plate,** 2.5 mm thick | | | |
| | orange | **281-329** | 100 (4x25) |
| | gray | **281-328** | 100 (4x25) |
| | light gray | **281-349** | 100 (4x25) |
| **Separator,** oversized, 2 mm thick | | | |
| | orange | **281-331** | 100 (4x25) |
| | gray | **281-330** | 100 (4x25) |
| | light gray | **281-350** | 100 (4x25) |
| **Ex e/Ex i separator,** orange, | | | |
| | 3 mm thick | | |
| | 120 mm | **209-191** | 50 (2x25) |
| | 90 mm | **209-190** | 50 (2x25) |

## Item-Specific Accessories

| | | | |
|---|---|---|---|
| **End and intermediate plate,** 2.5 mm thick | | | |
| | orange | **281-326** | 100 (4x25) |
| | gray | **281-324** | 100 (4x25) |
| | light gray | **281-355** | 100 (4x25) |
| **Separator,** oversized, 2 mm thick | | | |
| | orange | **281-346** | 100 (4x25) |
| | gray | **281-344** | 100 (4x25) |
| | light gray | **281-356** | 100 (4x25) |
| **Ex e/Ex i separator,** orange, | | | |
| | 3 mm thick | | |
| | 120 mm | **209-191** | 50 (2x25) |

## Item-Specific Accessories

| | | | |
|---|---|---|---|
| **End and intermediate plate,** 2.5 mm thick | | | |
| | orange | **281-335** | 100 (4x25) |
| | gray | **281-334** | 100 (4x25) |
| | light gray | **281-345** | 100 (4x25) |
| **Separator,** oversized, 2 mm thick | | | |
| | orange | **281-339** | 100 (4x25) |
| | gray | **281-338** | 100 (4x25) |
| | light gray | **281-347** | 100 (4x25) |
| **Ex e/Ex i separator,** orange, | | | |
| | 3 mm thick | | |
| | 120 mm | **209-191** | 50 (2x25) |
| **Cover plate,** | | | |
| | 1 mm thick | | |
| | gray | **284-336** | 100 |
| | orange | **284-346** | 100 |

## 281 Series Accessories

Appropriate marking systems: WMB/WFB
(see Section 13)

| | | | |
|---|---|---|---|
| **Insulation stop,** | | | |
| ❺ | 5 pcs/strip, | | |
| | 0.08 - 0.2 mm² "s" (0.14 mm² "f-st") | | |
| | white | **281-470** | 200 (8x25) |

| | | | |
|---|---|---|---|
| **Insulation stop,** | | | |
| ❺ | 5 pcs/strip, | | |
| | 0.25 - 0.5 mm² | | |
| | light gray | **281-471** | 200 (8x25) |

| | | | |
|---|---|---|---|
| **Insulation stop,** | | | |
| ❺ | 5 pcs/strip, | | |
| | 0.25 - 1.5 mm² | | |
| | dark gray | **281-472** | 200 (8x25) |

For list of approvals and user guide, see pages 634 to 637.

| | |
|---|---|
| 0.08 - 4 mm² | AWG 28 - 12 |
| 800 V/8 kV/3 ❶ | 600 V, 20 A |
| $I_N$ 32 A | 600 V, 25 A |

Terminal block width 6 mm / 0.236 in
9 - 10 mm / 0.37 in ❷

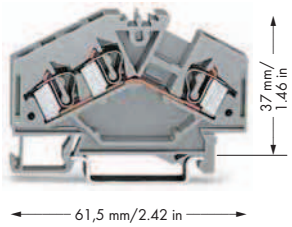


❶ 800 V = rated voltage
8 kV = rated surge voltage
3 = pollution degree
(also see Section 14)

❷ Strip length, see packaging or instructions.

❸ Suitable for Ex i applications

❹ Suitable for Ex e II applications
0.2 mm² - 4 mm²/AWG 24 - 12
550 V, 30 A
(also see Section 14)
Using staggered jumpers reduces the maximum rated voltage to 275 V.

❺ See application notes for:
Test plug modules, pages 194 – 196
Banana plug, page 198
Insulation stop, page 199
Comb-style jumper bar, page 200
Operating tool, page 200
Staggered jumper, page 201
Push-in type wire jumper, page 201
Step-down jumper, pages 178 – 179



| | Item No. | Pack. Unit |
|---|---|---|
| **3-conductor through terminal block** | | |
| gray | **281-631** | 100 |
| blue | **281-651** ❸ | 100 |
| light gray Ex | **281-998** ❹ | 100 |
| **3-conductor ground terminal block** | | |
| green-yellow | **281-637** | 100 |
| green-yellow Ex | **281-637/999-950** ❹ | 100 |

## Item-Specific Accessories

**End and intermediate plate,** 2.5 mm thick



| | | |
|---|---|---|
| orange | **281-313** | 100 (4x25) |
| gray | **281-312** | 100 (4x25) |
| light gray | **281-357** | 100 (4x25) |

**Separator,** oversized, 2 mm thick



| | | |
|---|---|---|
| gray | **281-318** | 100 (4x25) |
| gray | **281-348** | 100 (4x25) |
| light gray | **281-358** | 100 (4x25) |

**Ex e/Ex i separator,** orange,
3 mm thick



| | | |
|---|---|---|
| 120 mm | **209-191** | 50 (2x25) |

**Protective warning marker,**



with high-voltage symbol, black,
for 5 terminal blocks

| | | |
|---|---|---|
| yellow | **281-415** | 100 (4x25) |

## 281 Series Accessories

Appropriate marking systems: WMB/WFB
(see Section 13)

**Adjacent jumper,** insulated,



$I_N = I_N$ terminal block

| | | |
|---|---|---|
| gray | **281-402** | 200 (8x25) |
| yellow-green | **281-422** | 200 (8x25) |

**Alternate jumper,** insulated,



$I_N = I_N$ terminal block

| | | |
|---|---|---|
| gray | **281-409** | 100 (4x25) |

**Push-in type wire jumper,** ❺



insulated,
$I_N$ 9 A,
wire size 0.75 mm²

| | | |
|---|---|---|
| L = 60 mm | **249-125** | 10 |
| L = 110 mm | **249-126** | 10 |
| L = 250 mm | **249-127** | 10 |

**Staggered jumper,** ❺



insulated,
width 6 mm/0.236 in,
$I_N$ 32 A

| | | |
|---|---|---|
| from 1 to 2 | **781-452** | 100 (4x25) |
| from 1 to 3 | **781-453** | 100 (4x25) |
| from 1 to 4 | **781-454** | 100 (4x25) |
| from 1 to 5 | **781-455** | 50 (2x25) |
| from 1 to 6 | **781-456** | 50 (2x25) |

**Comb-style jumper bar,** insulated, ❺



$I_N = I_N$ terminal block

| | | |
|---|---|---|
| 2-way | **281-482** | 100 (4x25) |
| 3-way | **281-483** | 100 (4x25) |
| 5-way | **281-485** | 100 (4x25) |
| 10-way | **281-490** | 50 (2x25) |

**Alternate comb-style jumper bar,**



insulated,
$I_N = I_N$ terminal block

| | | |
|---|---|---|
| 2-way | **281-492** | 100 (4x25) |

**Operating tool,** of insulating material



| | | |
|---|---|---|
| 2-way | **280-432** | 1 |
| 3-way | **280-433** | 1 |
| 5-way | **281-440** | 1 |

**Step-down jumper,** insulated, ❺



$I_N$ 15 A

| | | |
|---|---|---|
| gray | **284-414** | 50 (2x25) |

**Step-down jumper,** insulated,



$I_N$ 30 A

| | | |
|---|---|---|
| gray | **284-413** | 50 (2x25) |

**Cover plate,**



1 mm thick

| | | |
|---|---|---|
| gray | **284-334** | 100 |
| orange | **284-344** | 100 |

**Test plug module,** ❺



can be snapped together,
6 mm wide

| | | |
|---|---|---|
| gray | **281-418** | 100 (4x25) |

**Spacer module,**



can be snapped together,
6 mm wide

| | | |
|---|---|---|
| gray | **281-419** | 100 (4x25) |

**Test plug,**



with 500 mm cable,
2 mm Ø

| | | |
|---|---|---|
| red | **210-136** | 50 |

**Test plug,**



with 500 mm cable,
2.3 mm Ø

| | | |
|---|---|---|
| yellow | **210-137** | 50 |

**Test plug adapter,** 5 mm wide,



for terminal blocks 1.5 - 4 mm²,
for 210-137 test plug 2.3 mm Ø

| | | |
|---|---|---|
| gray | **280-404** | 100 (4x25) |

**Test plug adapter,** 8.3 mm wide,



for terminal blocks 1.5 - 10 mm²,
for test plug 4 mm Ø

| | | |
|---|---|---|
| gray | **209-170** | 50 (2x25) |

**Banana plug,** ❺



for socket 4 mm Ø,
color mixed

| | |
|---|---|
| **215-111** | 50 |

**Test plug adapter,** 6 mm wide,



with CAGE CLAMP®,
for 0.08 - 2.5 mm²

| | | |
|---|---|---|
| $I_N$ 24 A | **281-407** | 100 (4x25) |

**Screwless end stop,**



for DIN 35 rail,
6 mm wide

| | | |
|---|---|---|
| gray | **249-116** | 100 (4x25) |

**Screwless end stop,**



for DIN 35 rail,
10 mm wide

| | | |
|---|---|---|
| gray | **249-117** | 50 (2x25) |

# Through/Ground Conductor and Ex Terminal Blocks 6 mm²
# 282 Series

CAGE CLAMP®

| | |
|---|---|
| 0.2 - 6 mm² | AWG 24 - 10 |
| 800 V/8 kV/3 ❶ | 600 V, 30 A |
| $I_N$ 41 A | 600 V, 40 A |

Terminal block width 8 mm / 0.315 in
12 - 13 mm / 0.49 in ❷

| | |
|---|---|
| 0.2 - 6 mm² | AWG 24 - 10 |
| 800 V/8 kV/3 ❶ | 600 V, 30 A |
| $I_N$ 41 A | 600 V, 40 A |

Terminal block width 8 mm / 0.315 in
12 - 13 mm / 0.49 in ❷

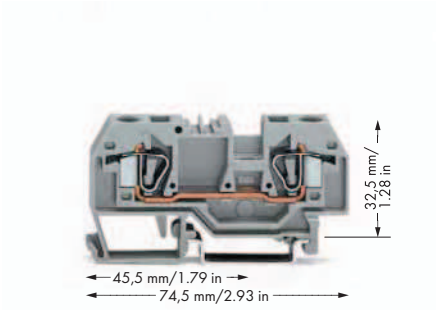


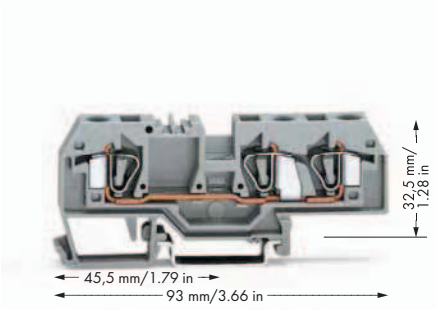


❶ 800 V = rated voltage
8 kV = rated surge voltage
3 = pollution degree
(also see Section 14)

❷ Strip length, see packaging or instructions.

❸ Suitable for Ex i applications

❹ Suitable for Ex e II applications
0.5 mm² - 6 mm²/AWG 20 - 10
550 V, 39 A
Jumper 35 A
(also see Section 14)

❺ See application notes for:
Test plug module, page 197
Banana plug, page 198
Step-down jumper, pages 178 – 179

| | Item No. | Pack. Unit |
|---|---|---|
| **2-conductor through terminal block** | | |
| gray | **282-901** | 50 |
| blue | **282-904** ❸ | 50 |
| orange | **282-902** | 50 |
| light gray Ex | **282-992** ❹ | 50 |
| **2-conductor ground terminal block** | | |
| green-yellow | **282-907** | 50 |
| green-yellow Ex | **282-907/999-950** ❹ | 50 |

| | Item No. | Pack. Unit |
|---|---|---|
| **3-conductor through terminal block** | | |
| gray | **282-681** | 25 |
| blue | **282-684** ❸ | 25 |
| orange | **282-682** | 25 |
| light gray Ex | **282-993** ❹ | 50 |
| **3-conductor ground terminal block** | | |
| green-yellow | **282-687** | 25 |
| green-yellow Ex | **282-687/999-950** ❹ | 50 |

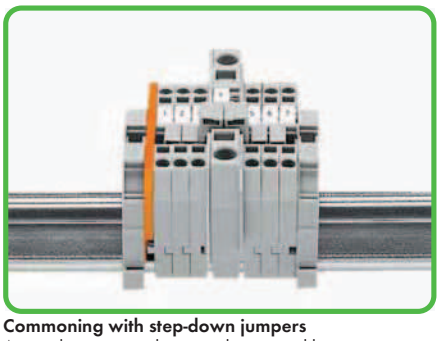

**Commoning with step-down jumpers**
A step-down cover plate must be inserted between terminal blocks to be jumpered. Step-down jumper 284-414 commons 10/6 mm²/AWG 8/10 terminal blocks with 4/2.5/1.5 mm²/AWG 12/14/16 terminal blocks.

Step-down jumpers are simply pushed down for full insertion, similar to adjacent jumpers.



**Commoning with step-down jumpers**
A step-down cover plate must be inserted between terminal blocks to be jumpered. Step-down jumper 284-413 commons 10/6 mm²/AWG 8/10 terminal blocks with 6/4 mm²/AWG 10/12 terminal blocks.

Step-down jumpers are simply pushed down for full insertion, similar to adjacent jumpers.

Note:
**The total current flowing shall not exceed the rating of the step-down jumper.**

## Item-Specific Accessories

| | | | |
|---|---|---|---|
| **End and intermediate plate,** 2.5 mm thick | | | |
| | orange | **282-328** | 100 (4x25) |
| | gray | **282-325** | 100 (4x25) |
| | light gray | **282-330** | 100 (4x25) |
| **Separator,** oversized, 2 mm thick | | | |
| | orange | **282-329** | 100 (4x25) |
| | gray | **282-326** | 100 (4x25) |
| | light gray | **282-331** | 100 (4x25) |
| **Cover plate,** | | | |
| | 1 mm thick | | |
| | gray | **282-357** | 25 |
| | orange | **282-367** | 25 |

## Item-Specific Accessories

| | | | |
|---|---|---|---|
| **End and intermediate plate,** 2.5 mm thick | | | |
| | orange | **282-339** | 100 (4x25) |
| | gray | **282-308** | 100 (4x25) |
| | light gray | **282-341** | 100 (4x25) |
| **Separator,** oversized, 2 mm thick | | | |
| | orange | **282-340** | 100 (4x25) |
| | gray | **282-309** | 100 (4x25) |
| | light gray | **282-342** | 100 (4x25) |
| **Cover plate,** | | | |
| | 1 mm thick | | |
| | gray | **282-358** | 25 |
| | orange | **282-368** | 25 |

## 282 Series Accessories

Appropriate marking systems:
WMB/WFB (see Section 13)

| | | | |
|---|---|---|---|
| **Ex e/Ex i separator,** orange, | | | |
| | 3 mm thick | | |
| | 120 mm | **209-191** | 50 (2x25) |
| **Adjacent jumper,** insulated, | | | |
| | $I_N$ 41 A | | |
| | gray | **282-402** | 100 (4x25) |
| | yellow-green | **282-422** | 100 (4x25) |
| **Alternate jumper,** insulated, | | | |
| | $I_N$ 41 A | | |
| | gray | **282-409** | 100 (4x25) |
| **Protective warning marker,** | | | |
| | with high-voltage symbol, black, | | |
| | for 5 terminal blocks | | |
| | yellow | **282-415** | 100 (4x25) |
| **Step-down jumper,** insulated, | | | |
| ❺ | $I_N$ 15 A | | |
| | gray | **284-414** | 50 (2x25) |

| | | | |
|---|---|---|---|
| **Step-down jumper,** insulated, | | | |
| | $I_N$ 30 A | | |
| | gray | **284-413** | 50 (2x25) |
| **Test plug adapter,** 8.3 mm wide, | | | |
| | for terminal blocks 1.5 - 10 mm², | | |
| | for test plug 4 mm Ø | | |
| | gray | **209-170** | 50 (2x25) |
| **Banana plug,** | | | |
| ❺ | for socket 4 mm Ø, | | |
| | color mixed | | |
| | | **215-111** | 50 |
| **B-type test plug module,** | | | |
| ❺ | can be snapped together, | | |
| | 8 mm wide | | |
| | gray | **709-310** | 100 (4x25) |
| **B-type spacer module,** | | | |
| | can be snapped together, | | |
| | 8 mm wide | | |
| | gray | **709-311** | 100 (4x25) |

For list of approvals and user guide, see pages 634 to 637.