Box walls without knockouts



K 0201

IP 65 | PC | RAL 7035

- with opaque lid
- lid fasteners for tool operation
- box walls without knockouts
- please order DIN rails or mounting plates additionally
- for normal environment and protected outdoor
- colour: grey, RAL 7035

wall thickness of the bottom part	3,5 mm
Degree of protection:	IP 65
Material:	PC (Polycarbonate)
mounting width	275 mm
mounting height	275 mm
max. installation depth	with built-in mounting plate 146 mm
max. installation depth	with built-in DIN rail 135 mm
width	300 mm
height:	300 mm
depth	170 mm
Weight	2,01 kg

Drawings

Dimension drawing

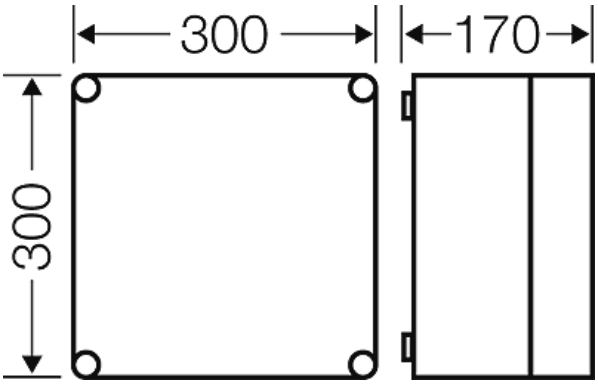

Gustav Hensel GmbH & Co. KG * Gustav-Hensel-Str. 6 * 57368 Lennestadt * Germany * Telefon: +49 (0)2723/609-0 * Fax: +49 (0)2723/60052 * Date: June 29. 2015

Box walls without knockouts



K 0201

IP 65 | PC | RAL 7035

Detail mass

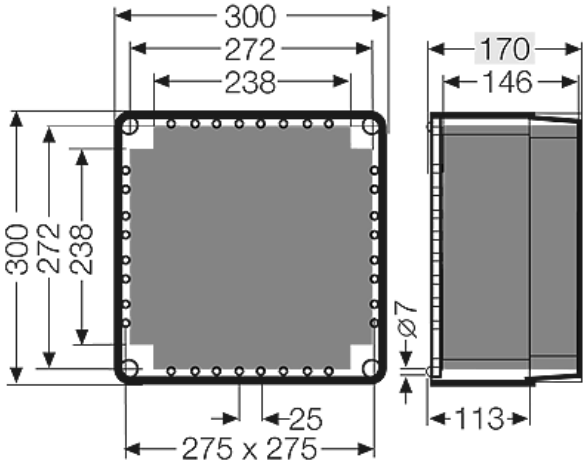

Operating and ambient conditions

Application area	Suitable for indoor installation and outdoor installation, protected against weather influences However, pay attention to the climatic effects on the installed equipment , for example, high or low ambient temperatures or formation of condensed water see technical information
Ambient temperature	Maximum value + 70 °C Minimum value - 25 °C
Fire protection in the event of internal faults	Demands placed on electrical devices from standards and laws Minimum requirements - Glow wire test in accordance with IEC 60 695-2-11: - 650°C for boxes and cable glands - 850°C for parts of insulating material necessary to retain current carrying parts in position
Burning behaviour	Glow wire test IEC 60 695-2-11: 960 °C UL Subject 94: V-2 flame-retardant self-extinguishing
Degree of protection against mechanical load	IK08 (5 Joule)
Toxic behaviour	halogen-free silicone-free "halogen-free" in accordance with the examination of the cables and insulated wires - corrosiveness of fumes - as per IEC 60 754-2
Note:	For material properties see technical data.