WAGO online catalog / eShop

4-conductor ground terminal block

Item No.: 280-837



4-conductor ground terminal block

Marking

RoHS ✓
Compliant

Business data

Supplier	*WAGO*
Item no.	*280-837*
EAN	*4045454100155*
Content	*1*
Order amount	*100*
Customer item number	

Notes

Technical data

Miscellaneous

Total number of connection points	*4*
Total number of potentials	*1*
Color	*green-yellow*
Connection technology (1)	*CAGE CLAMP®*
Cross section from (1) [mm²]	*0.08 [mm²]*
Cross section up to (1) [mm²]	*2.5 [mm²]*
Cross section from (1) [AWG]	*28 [AWG]*
Cross section up to (1) [AWG]	*12 [AWG]*
Stripped length from (1) [mm]	*8 [mm]*
Stripped length up to (1) [mm]	*9 [mm]*

Technical data

Stripped length (1) [in]	*0.33 [in]*
Type of wiring	*Front-entry wiring*
Design	*horizontal*
Marking level	*Center marking*
Fire load [MJ]	*0.132 [MJ]*
Weight [g]	*12.932 [g]*
Width [mm]	*5 [mm]*
Width [in]	*0.197 [in]*
Height [mm]	*28 [mm]*
Height [in]	*1.102 [in]*
Length [mm]	*75 [mm]*
Length [in]	*2.953 [in]*
Type of mounting	*DIN 35 rail*

Approbation

Item No.	Registration	Registration no.	Voltage [V]	Current [A]	Cross section [mm², AWG]
280-837	*ABS*	*05-HG476175/3-PDA*			*2,5*
280-837	*BV*	*07436/C0*	*800*	*20*	*2,5*
280-837	*CCA*	*NL5855*			*2,5*
280-837	*CSA*	*154112-1536071*			*28-12*
280-837	*DNV*	*E-10423*	*800*	*20*	*2,5*
280-837	*GL*	*17295-00HH*			*2,5*
280-837	*KEMA*	*2082859.07*			*2,5*
280-837	*LR*	*91/20112(E6)*	*800*	*20*	*2,5*
280-837	*PRS*	*TE/1718/880590/08*			*2,5*
280-837	*RMR*	*11130002*	*800*	*20*	*2,5*
280-837	*UL*	*E45172*			*28-12*

Accessories

Accessories

Insulation stop

Item no.	Description	Pack. unit (Sub Pack)
280-470	Insulation stop; 0.08 - 0.2 mm² "s" (0.14 mm² "f-st"); 5 pieces/strip	25
280-471	Insulation stop; 0.25 - 0.5 mm²; 5 pieces/strip	25
280-472	Insulation stop; 0.75 - 1 mm²; 5 pieces/strip	25

Accessories

Jumper

Item no.	Description	Pack. unit (Sub Pack)
210-103	Wire commoning chain; insulated; 50 connections	1
210-123	Wire commoning chain; insulated; 50 connections	1
249-123	Push-in type wire jumper; insulated; wire length 180 mm; Conductor cross section 0.75 mm²	10
249-125	Push-in type wire jumper; insulated; wire length 60 mm; Conductor cross section 0.75 mm²	10
249-126	Push-in type wire jumper; insulated; wire length 110 mm; Conductor cross section 0.75 mm²	10
249-127	Push-in type wire jumper; insulated; wire length 250 mm; Conductor cross section 0.75 mm²	10
280-402	Adjacent jumper; insulated; IN = IN terminal block	25
280-409	Alternate jumper; insulated; IN = IN terminal block	25
280-422	Adjacent jumper; insulated; IN = IN terminal block	25
280-482	Comb-style jumper bar; insulated; 2-way; IN = IN terminal block	25
280-483	Comb-style jumper bar; insulated; 3-way; IN = IN terminal block	25
280-484	Comb-style jumper bar; insulated; 4-way; IN = IN terminal block	25
280-485	Comb-style jumper bar; insulated; 5-way; IN = IN terminal block	25
280-490	Comb-style jumper bar; insulated; 10-way; IN = IN terminal block	25
281-402	Adjacent jumper; insulated; IN = IN terminal block; Nominal current 32 A	25
709-110	Wire commoning chain; insulated; 4 connections; 3 x 110 mm	1
709-111	Wire commoning chain; insulated; 3 connections; 2 x 120 mm	1
709-112	Wire commoning chain; insulated; 3 connections; 2 x 170 mm	1
780-452	Staggered jumper; insulated; from 1 to 2; Spacing: 5 mm; suitable for 2-conductor female plugs	25
780-453	Staggered jumper; insulated; from 1 to 3; Spacing: 5 mm; suitable for 2-conductor female plugs	25
780-454	Staggered jumper; insulated; from 1 to 4; Spacing: 5 mm; suitable for 2-conductor female plugs	25
780-455	Staggered jumper; insulated; from 1 to 5; Spacing: 5 mm; suitable for 2-conductor female plugs	25
780-456	Staggered jumper; insulated; from 1 to 6; Spacing: 5 mm; suitable for 2-conductor female plugs	25
780-457	Staggered jumper; insulated; from 1 to 7; Spacing: 5 mm; suitable for 2-conductor female plugs	25
780-458	Staggered jumper; insulated; from 1 to 8; Spacing: 5 mm; suitable for 2-conductor female plugs	25

Accessories

End plate

Item no.	Description	Pack. unit (Sub Pack)
280-314	End and intermediate plate; 2.5 mm thick	25
280-315	End and intermediate plate; 2.5 mm thick	25
280-334	Separator plate; 2 mm thick; oversized	25
280-335	Separator plate; 2 mm thick; oversized	25

Carrier rail

Item no.	Description	Pack. unit (Sub Pack)
210-112	Steel carrier rail; 35 x 7.5 mm; 1 mm thick; 2 m long; slotted; according to en 60715; "Hole width 25 mm	1
210-113	Steel carrier rail; 35 x 7.5 mm; 1 mm thick; 2 m long; unslotted; according to en 60715	1
210-114	Steel carrier rail; 35 x 15 mm; 1.5 mm thick; 2 m long; unslotted; according to en 60715	1
210-115	Steel carrier rail; 35 x 7.5 mm; 1 mm thick; 2 m long; slotted; according to en 60715; "Hole width 18 mm	1
210-118	Steel carrier rail; 35 x 15 mm; 2.3 mm thick; 2 m long; unslotted; according to en 60715	1
210-196	Aluminum carrier rail; 35 x 8.2 mm; 1.6 mm thick; 2 m long; unslotted; according to en 60715	1
210-197	Steel carrier rail; 35 x 15 mm; 1.5 mm thick; 2 m long; slotted; according to en 60715	1
210-198	Copper carrier rail; 35 x 15 mm; 2.3 mm thick; 2 m long; unslotted; according to en 60715	1
210-504	Steel carrier rail; 35 x 7.5 mm; 1 mm thick; 2 m long; slotted; galvanized; according to EN 60715	1
210-505	Steel carrier rail; 35 x 7.5 mm; 1 mm thick; 2 m long; unslotted; galvanized; according to EN 60715	1
210-506	Steel carrier rail; 35 x 15 mm; 1.5 mm thick; 2 m long; unslotted; galvanized; ähnlich EN 60715	1
210-508	Steel carrier rail; 35 x 15 mm; 1.5 mm thick; 2 m long; slotted; galvanized; ähnlich EN 60715	1

Accessories

Marking accessories

Item no.	Description	Pack. unit (Sub Pack)
793-501	WMB Multi marking system; plain; for terminal block width 5 - 17.5 mm; 10 strips with 10 markers per card	5
793-501/000-002	WMB Multi marking system; plain; for terminal block width 5 - 17.5 mm; 10 strips with 10 markers per card	5
793-501/000-005	WMB Multi marking system; plain; for terminal block width 5 - 17.5 mm; 10 strips with 10 markers per card	5
793-501/000-006	WMB Multi marking system; plain; for terminal block width 5 - 17.5 mm; 10 strips with 10 markers per card	5
793-501/000-007	WMB Multi marking system; plain; for terminal block width 5 - 17.5 mm; 10 strips with 10 markers per card	5
793-501/000-012	WMB Multi marking system; plain; for terminal block width 5 - 17.5 mm; 10 strips with 10 markers per card	5
793-501/000-017	WMB Multi marking system; plain; for terminal block width 5 - 17.5 mm; 10 strips with 10 markers per card	5
793-501/000-023	WMB Multi marking system; plain; for terminal block width 5 - 17.5 mm; 10 strips with 10 markers per card	5
793-501/000-024	WMB Multi marking system; plain; for terminal block width 5 - 17.5 mm; 10 strips with 10 markers per card	5
793-5501	WMB Multi marking system; plain; for terminal block width 5 - 17.5 mm; stretchable 5 - 5.2 mm; 10 strips with 10 markers per card	5
793-5501/000-002	WMB Multi marking system; plain; for terminal block width 5 - 17.5 mm; stretchable 5 - 5.2 mm; 10 strips with 10 markers per card	5
793-5501/000-005	WMB Multi marking system; plain; for terminal block width 5 - 17.5 mm; stretchable 5 - 5.2 mm; 10 strips with 10 markers per card	5
793-5501/000-006	WMB Multi marking system; plain; for terminal block width 5 - 17.5 mm; stretchable 5 - 5.2 mm; 10 strips with 10 markers per card	5
793-5501/000-007	WMB Multi marking system; plain; for terminal block width 5 - 17.5 mm; stretchable 5 - 5.2 mm; 10 strips with 10 markers per card	5
793-5501/000-012	WMB Multi marking system; plain; for terminal block width 5 - 17.5 mm; stretchable 5 - 5.2 mm; 10 strips with 10 markers per card	5
793-5501/000-017	WMB Multi marking system; plain; for terminal block width 5 - 17.5 mm; stretchable 5 - 5.2 mm; 10 strips with 10 markers per card	5
793-5501/000-023	WMB Multi marking system; plain; for terminal block width 5 - 17.5 mm; stretchable 5 - 5.2 mm; 10 strips with 10 markers per card	5

Accessories

793-5501/000-024	WMB Multi marking system; plain; for terminal block width 5 - 17.5 mm; stretchable 5 - 5.2 mm; 10 strips with 10 markers per card	5

Protective warning marker

Item no.	Description	Pack. unit (Sub Pack)
280-415	Protective warning marker; with high-voltage symbol, black; for 5 terminal blocks	25

N-busbar

Item no.	Description	Pack. unit (Sub Pack)
210-612	WFB continuous marking strip; 1000 mm long; for self-marking; e.g., with fiber-tip pen	10

Accessories

General accessory

Item no.	Description	Pack. unit (Sub Pack)
209-100	Collective carrier for adjacent jumpers; suitable for 279 to 284 Series adjacent jumpers, 215 Series banana plugs	25
209-106	Mounting carrier; for isolated mounting on DIN 35 rails	25
209-130	Operating tool; suitable for 264, 280 and 281 Series; 1-way; of insulating material	1
209-140	Group marker carrier; for up to 3 WMB markers or 8 branche markers; 15 mm wide; for terminal block width 4 - 6 mm; for jumper contact slots of rail-mounted terminal blocks	25
209-141	Group marker carrier; for up to 2 WMB markers or 5 branche markers; 10 mm wide; for terminal block width 4 - 6 mm; for jumper contact slots of rail-mounted terminal blocks	25
209-142	Group marker carrier; for up to 1 WMB marker or 2 branche markers; 5 mm wide; for terminal block width 4 - 6 mm; for jumper contact slots of rail-mounted terminal blocks	25
209-170	Test plug adapter; 8.3 mm wide; for test plug 4 mm Ø; suitable for 1.5 mm² - 10 mm² terminal blocks	25
209-196	Spare fixing/retaining screw; for cover	25
210-186	Stickers for operating instructions; for front-entry rail-mounted terminal blocks; 279 to 285 Series	100
210-549	Spare knurled nut; for cover	25
210-657	Operating tool with partially insulated shaft; blade (3.5 x 0.5) mm; short; suitable for 260, 261, 262, 264, 270, 280, 281, 869, 870 and 880 Series	1
210-658	Operating tool with partially insulated shaft; blade (3.5 x 0.5) mm; short; angled; particularly suitable for 280 Series actuator and sensor terminal blocks and also for Series 260, 261, 262, 264, 280, 281, 869, 870, 880, 2002,	1
210-720	Operating tool with partially insulated shaft; Type 2, blade (3.5 x 0.5) mm; suitable for 260, 261, 262, 264, 270, 280, 281, 290, 775, 776, 777, 769, 780, 781, 869, 870, 880, 2002, 2003, 2004, 2005 and 2022 Series	1
231-155	Testing plug module with contact stud; for 280, 736, 737, 738, 780 series; pin spacing 5 mm / 0.197 in; CAGE CLAMP®CONNECTION	100
249-105	Pivoting group marker carrier	25
249-106	B-type test plug module; modular; Module width 5 mm	25
249-107	B-type spacer module; modular; e.g., for bridging commoned terminal blocks; Module width 5 mm	25
249-130	Syringe; Contents: 20 ml Alu-Plus contact paste	5
249-141	L-type test plug module; modular; with spring-loaded contact pin; center module	25
249-142	L-type end module; modular; with rigid contact pin; end module	25
249-143	L-type spacer module; modular; e.g., bridging commoned terminal blocks	25

Accessories

280-404	Test plug adapter; 5 mm wide; for test plug 210-137 (2.3 mm Ø); suitable for 1.5 mm² - 4 mm² terminal blocks	25
280-418	Test plug module; modular; suitable for all WAGO 280 and 780 Series rail-mounted terminal blocks with jumper slots in the current bar	25
280-419	Spacer module; modular; bridging commoned terminal blocks; Module width 5 mm	25
280-432	Operating tool; of insulating material; 2-way	1
280-433	Operating tool; of insulating material; 3-way	1
280-434	Operating tool; of insulating material; 4-way	1
280-435	Operating tool; of insulating material; 5-way	1
280-436	Operating tool; of insulating material; 6-way	1
280-437	Operating tool; of insulating material; 7-way	1
280-438	Operating tool; of insulating material; 8-way	1
280-439	Operating tool; of insulating material; 9-way	1
280-440	Operating tool; of insulating material; 10-way	1
281-407	Test plug; 6 mm wide; nominal current 24 A; for 0.08 mm² - 2.5 mm²	25
709-153	Cover; type 1; suitable for cover carrier, type 1; 1 m long	10

Images & drawings



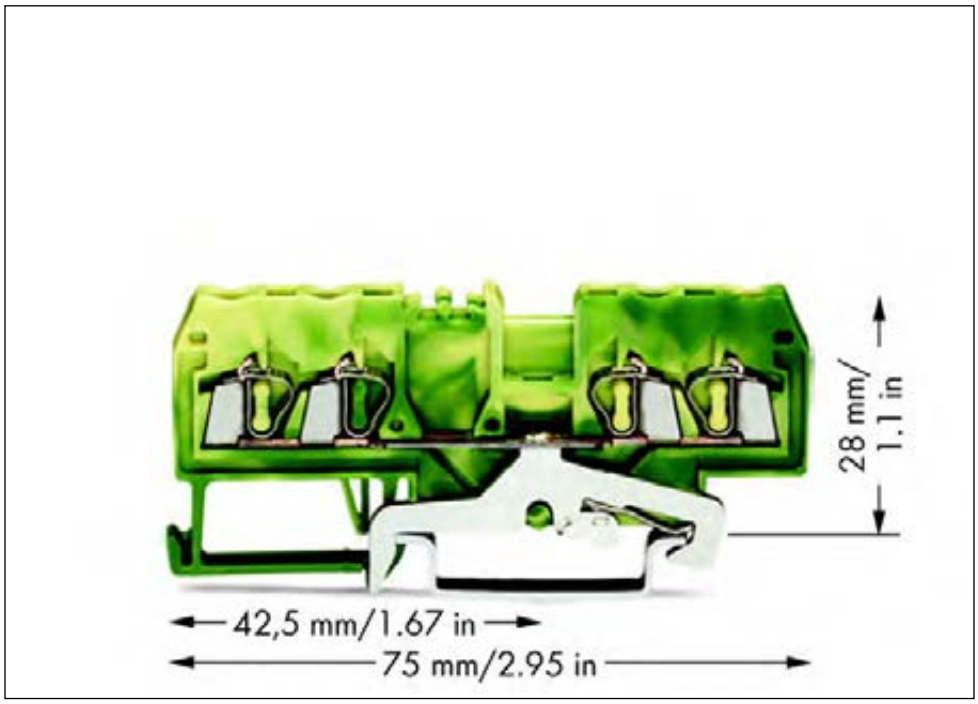

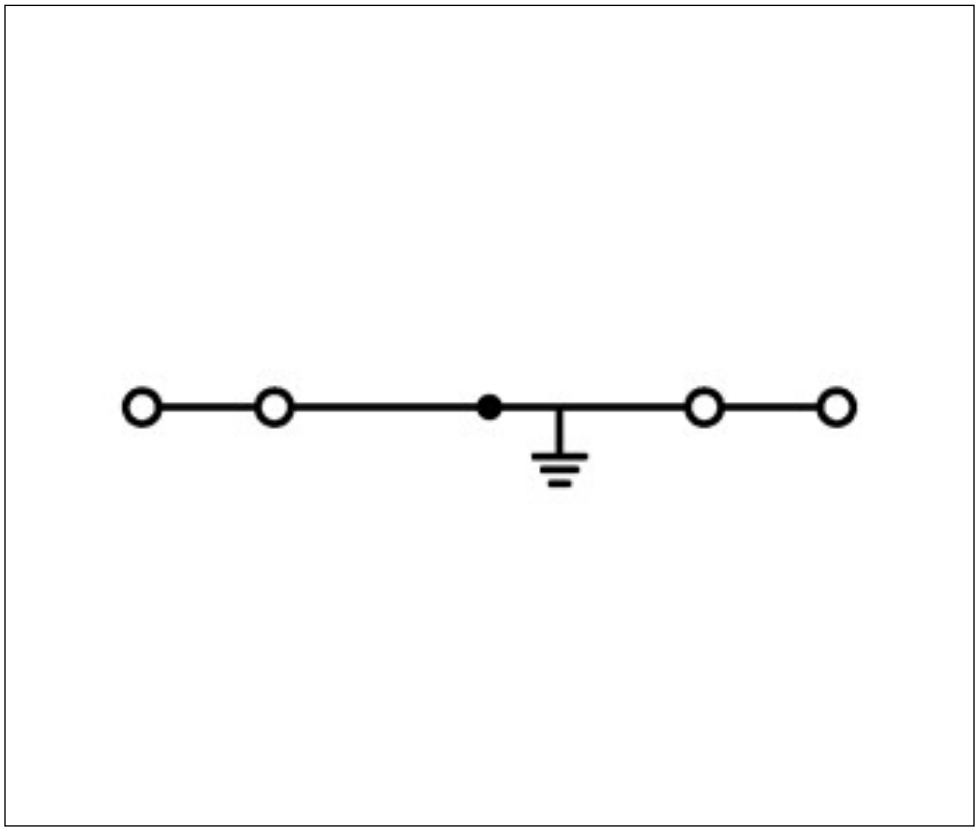

Address

WAGO Kontakttechnik GmbH & Co. KG
Hansastr. 27
32423 Minden
Telefon: 0571/887-0
Fax: 0571/887-169
http://www.wago.com
© WAGO Kontakttechnik GmbH & Co. KG
Technische Änderungen und Irrtümer vorbehalten.