Karta danych technicznych
T piece hood

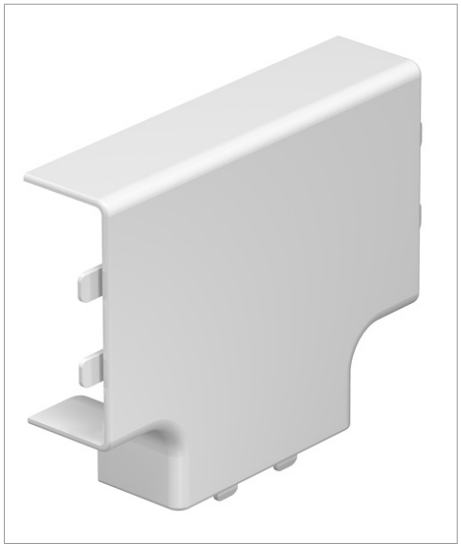

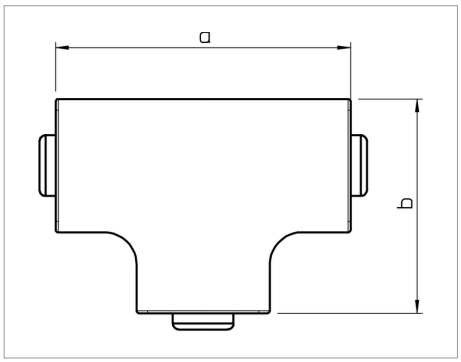

T piece cover for changing the direction of the WDK trunking.

Type	Colour	Dimension a mm	Dimension b mm	Pack. pcs	Weight kg/100 pcs.	Nr kat.
WDK HT20050RW	Pure white; RAL 9010	93	73	4	3.500	6154166
WDK HT20050CW	Cream; RAL 9001	93	73	4	3.500	6152384

PVC Polyvinylchloride /pc.

Legenda

CE Communautés Européennes, EC declaration of conformity according to EC directives