Karta danych technicznych
T piece hood



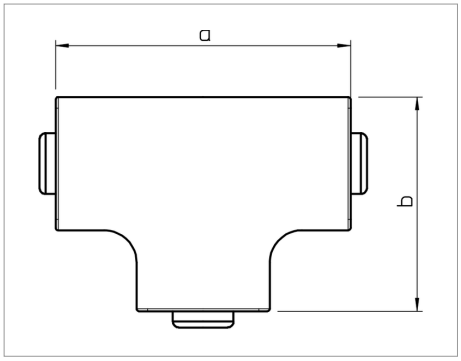

T piece cover for changing the direction of the WDK trunking.

Type	Colour	Dimension a mm	Dimension b mm	Pack. pcs	Weight kg/100 pcs.	Nr kat.
WDK HT25025RW	Pure white; RAL 9010	68	48	4	1.000	6192483
WDK HT25025CW	Cream; RAL 9001	68	48	4	1.000	6161944
WDK HT25025LGR	Light grey; RAL 7035	68	48	4	1.000	6182852
WDK HT25025GR	Stone grey; RAL 7030	68	48	4	1.000	6158498

PVC Polyvinylchloride /pc.

Legenda

CE Communautés Européennes, EC declaration of conformity according to EC directives