SIEMENS

Data sheet 3RM1001-1AA04



Figure similar

MOTOR STARTER 3RM1 SIRIUS DIRECT STARTER 500 V, 0,1-0,5 A, 24 V DC SCREW-TYPE CONNECTION SYSTEM

General technical data:	
product brand name	SIRIUS
Product designation	Motor starter
Design of the product	with electronic overload protection
Trip class	CLASS 10A
Protection class IP	IP20
Suitability for operation Device connector 3ZY12	Yes
Product function Intrinsic device protection	Yes
Type of the motor protection	solid-state
Product function Adjustable current limitation	Yes
Installation altitude at height above sea level maximum	4 000 m
Ambient temperature	
• during operation	-25 ... +60 °C
• during transport	-40 ... +70 °C
• during storage	-40 ... +70 °C
Shock resistance	6g / 11 ms
Vibration resistance	1 ... 6 Hz, 15 mm; 20 m/s², 500 Hz
Surge voltage resistance Rated value	6 kV
Insulation voltage Rated value	500 V
Mechanical service life (switching cycles) typical	30 000 000
Conducted interference due to conductor-conductor surge acc. to IEC 61000-4-5	1 kV
Conducted interference due to burst acc. to IEC 61000-4-4	3 kV / 5 kHz

Changes preserved
© Copyright Siemens AG

Conducted interference due to high-frequency radiation acc. to IEC 61000-4-6	10 V
Electrostatic discharge acc. to IEC 61000-4-2	4 kV contact discharge / 8 kV air discharge
Field-bound HF-interference emission acc. to CISPR11	Class B for the domestic, business and commercial environments
Conducted HF-interference emissions acc. to CISPR11	Class B for the domestic, business and commercial environments
maximum permissible voltage for safe isolation	
• between main and auxiliary circuit	500 V
• between control and auxiliary circuit	250 V
Equipment marking acc. to DIN 40719 extended according to IEC 204-2 acc. to IEC 750	Q
Equipment marking acc. to DIN EN 61346-2	Q

Safety related data:	
Protection against electrical shock	finger-safe

Main circuit:	
Number of poles for main current circuit	3
Operating voltage Rated value maximum	500 V
Operating frequency	
• 1 Rated value	50 Hz
• 2 Rated value	60 Hz
Minimum load [% of IM]	20 %
Active power loss typical	0.02 W
Adjustable response value current of the current-dependent overload release	0.1 ... 0.5 A
Operating power for three-phase motors at 400 V at 50 Hz	0 ... 0.12 kW
Operating frequency maximum	1 1/s

Control circuit/ Control:	
Type of voltage of the control supply voltage	DC
Control supply voltage 1	
• for DC Rated value	24 V
Operating range factor control supply voltage rated value	
• for DC	0.8 ... 1.25
Control current	
• for DC	
— in standby mode	25 mA
— during operation	70 mA
— when switching on	150 mA
Input voltage at digital input	
• for signal <1>	

Changes preserved
© Copyright Siemens AG

— for DC	15 ... 30 V
• with signal <0>	
— for DC	0 ... 5 V
Input current at digital input	
• for signal <1>	
— for DC	11 mA
• with signal <0>	
— for DC	1 mA
Switch-on delay time	60 ... 90 ms
OFF-delay time	60 ... 90 ms

Auxiliary circuit:	
Number of CO contacts for auxiliary contacts	1
Design of the switching contact as NO contact for signaling function	Electronic
Operating current of the auxiliary contacts	
• at AC-15 maximum	3 A
• at DC-13 maximum	1 A

Installation/ mounting/ dimensions:	
mounting position	vertical, horizontal, standing
Mounting type	screw and snap-on mounting onto 35 mm standard mounting rail
Width	22.5 mm
Height	100 mm
Depth	141.6 mm

Connections/ Terminals:	
Type of electrical connection	
• for main current circuit	screw-type terminals
• for auxiliary and control current circuit	screw-type terminals
Type of connectable conductor cross-section for main contacts	
• solid	1x (0,5 ... 4 mm²), 2x (0,5 ... 2,5 mm²)
• finely stranded	
— with core end processing	1x (0,5 ... 2,5 mm²), 2x (0,5 ... 1,5 mm²)
Type of connectable conductor cross-section for AWG conductors for main contacts	1x (20 ... 12), 2x (20 ... 14)
Type of connectable conductor cross-section for auxiliary contacts	
• solid	1x (0,5 ... 2,5 mm²), 2x (1,0 ... 1,5 mm²)
• finely stranded	
— with core end processing	1x (0.5 ... 2.5 mm²), 2x (0.5 ... 1 mm²)
Type of connectable conductor cross-section for AWG conductors for auxiliary contacts	1x (20 ... 14), 2x (18 ... 16)

Changes preserved
© Copyright Siemens AG

UL ratings:

Full-load current (FLA) for three-phase AC motor at 480 V Rated value	0.5 A

Certificates/ approvals:

General Product Approval				Declaration of Conformity	Test Certificates
CCC	GOST	UL	EAC	EG-Konf.	Type Test Certificates/Test Report

Test Certificates	other	
Special Test Certificate	Environmental Confirmations	Confirmation

Further information

Information- and Downloadcenter (Catalogs, Brochures,…)
http://www.siemens.com/industrial-controls/catalogs

Industry Mall (Online ordering system)
http://www.siemens.com/industrymall

Cax online generator
http://support.automation.siemens.com/WW/CAXorder/default.aspx?lang=en&mlfb=3RM10011AA04

Service&Support (Manuals, Certificates, Characteristics, FAQs,...)
https://support.industry.siemens.com/cs/ww/en/ps/3RM10011AA04

Image database (product images, 2D dimension drawings, 3D models, device circuit diagrams, EPLAN macros, ...)
http://www.automation.siemens.com/bilddb/cax_de.aspx?mlfb=3RM10011AA04&lang=en

Changes preserved
© Copyright Siemens AG

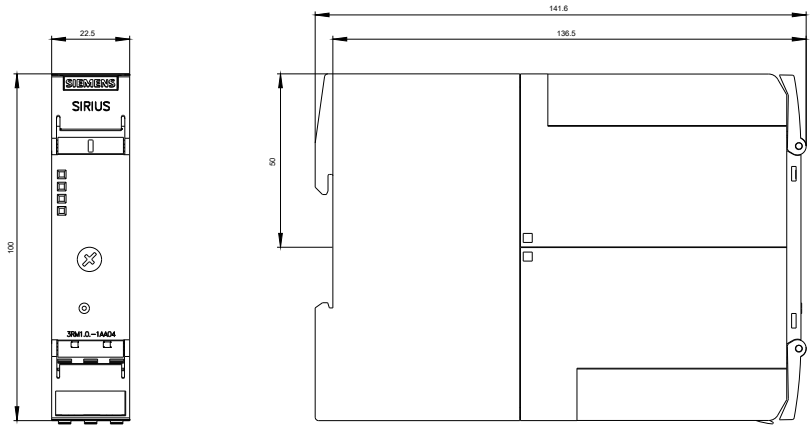

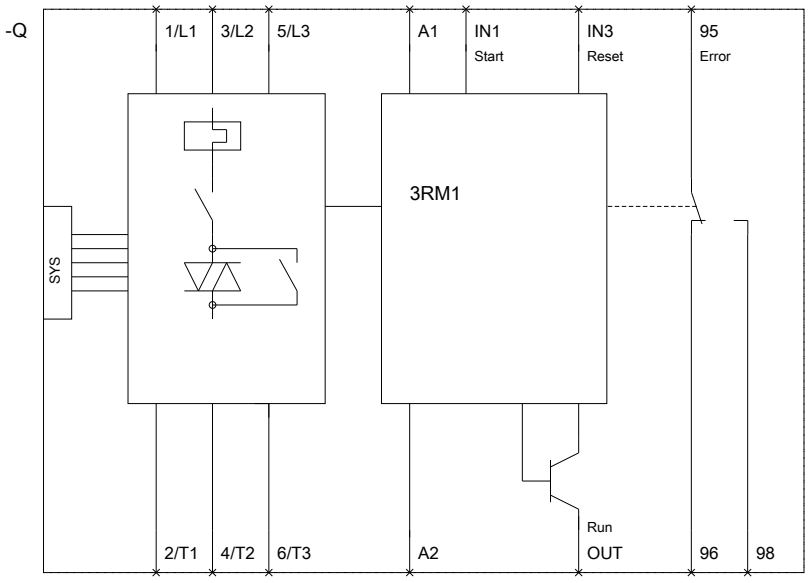

last modified: 08.06.2015

Changes preserved
© Copyright Siemens AG