0.2 - 6 mm²	AWG 24 - 10
500 V/6 kV/3 ❶	600 V, 30 A
I_N 30 A	300 V, 5 A

Terminal block width 8 mm / 0.315 in
12 - 13 mm / 0.49 in ❷

0.2 - 6 mm²	AWG 24 - 10

Terminal block width 8 mm / 0.315 in
12 - 13 mm / 0.49 in ❷

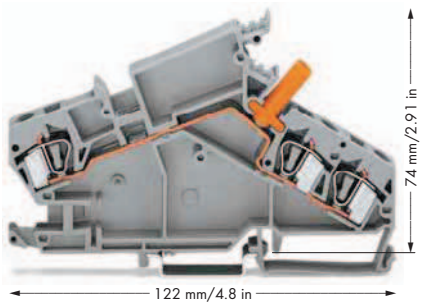

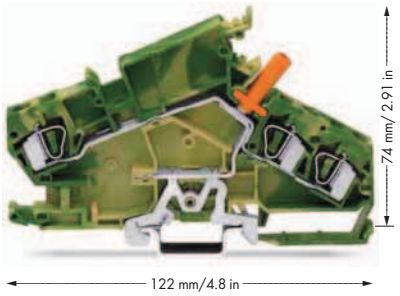

❶ 500 V = rated voltage
6 kV = rated surge voltage
3 = pollution degree
(also see Section 14)

❷ Strip length, see packaging or instructions.

❸ Max. height when rotating the disconnect link (incl. locking cover): 92 mm/3.62 in

❹ For operating stickers, please refer to our online catalog:
for 282-870: Item No. 210-412
for 282-865: Item No. 210-415
for 282-860: Item No. 210-414
for 282-866: Item No. 210-413

	Item No.	Pack. Unit
Through terminal block,		
e.g., voltage transformer circuits,		
with touch-proof test socket		
gray	**282-866** ❹	20

	Item No.	Pack. Unit
Ground terminal block,		
e.g., voltage transformer circuits,		
with touch-proof test socket		
green-yellow	**282-868** ❹	20

Item-Specific Accessories

End and separator plate,



1.5 mm thick

orange	**282-385**	50 (5x10)
gray	**282-390**	50 (5x10)

WMB Multi marking system,



10 strips with 10 markers per card,
for terminal widths 5 - 17.5 mm,
blue
U/V (50x) **794-5554/000-006**
5

Item-Specific Accessories

End and separator plate,



1.5 mm thick

orange	**282-385**	50 (5x10)
gray	**282-390**	50 (5x10)

282 Series Accessories

Appropriate marking systems
(see Section 13)

Adjacent jumper, insulated,



I_N 41 A
gray **282-402** 100 (4x25)

Alternate jumper, insulated,



I_N 41 A
gray **282-409** 100 (4x25)

Protective warning marker,



with high-voltage symbol, black,
for 5 terminal blocks
yellow **282-415** 100 (4x25)

Wire commoning chain, 4 connections,



3 x 110 mm,
insulated, I_N 24 A
black **709-110** 1

Wire commoning chain, 3 connections,



2 x 120 mm,
insulated, I_N 24 A
black **709-111** 1

Wire commoning chain, 3 connections,



2 x 170 mm,
insulated, I_N 24 A
black **709-112** 1

Group marker carrier,



e.g., for 282 Series transformer terminal blocks, angled
gray **209-144** 50 (2x25)

WMB Multi marking system,

10 strips with 10 markers per card,
for terminal widths 5 - 17.5 mm
plain **793-501** 5

WMB Multi marking system, plain,



10 strips with 10 markers per card,
for terminal widths 5 - 17.5 mm

yellow	**793-501/000-002**
red	**793-501/000-005**
blue	**793-501/000-006**
gray	**793-501/000-007**
orange	**793-501/000-012**
light green	**793-501/000-017**
green	**793-501/000-023**
violet	**793-501/000-024**

5