Circuit Configuration Examples

CAGE CLAMP® connection

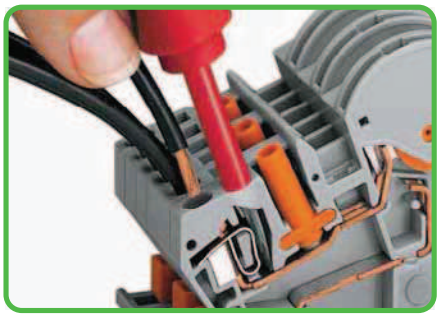

Conductor termination with operating tool (5.5 x 0.8) mm

Additional CAGE CLAMP®-connection

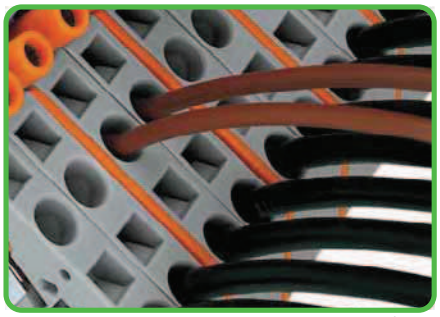

Additional CAGE CLAMP® connection on the side of the measuring instrument. For example: connecting wire commoning chains or applying an external voltage.

Commoning

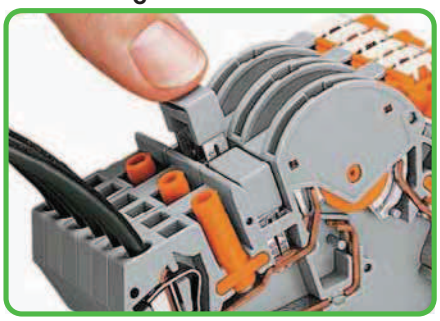

Additional commoning possible with adjacent jumper or testing option via 209-170 test plug adapter on transformer side.

Lock-out seal

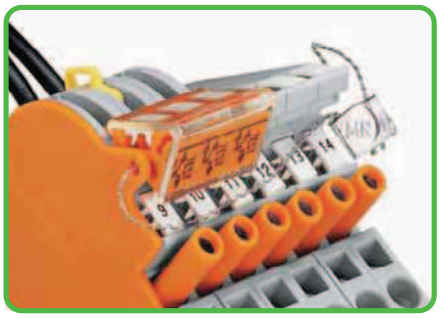

A lock-out seal can be used on the disconnect link in notched position "I".

Measuring set for a single-phase current transformer

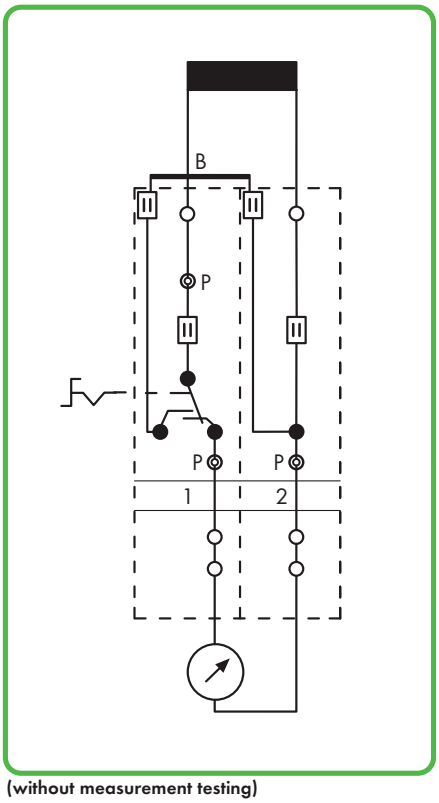

(without measurement testing)

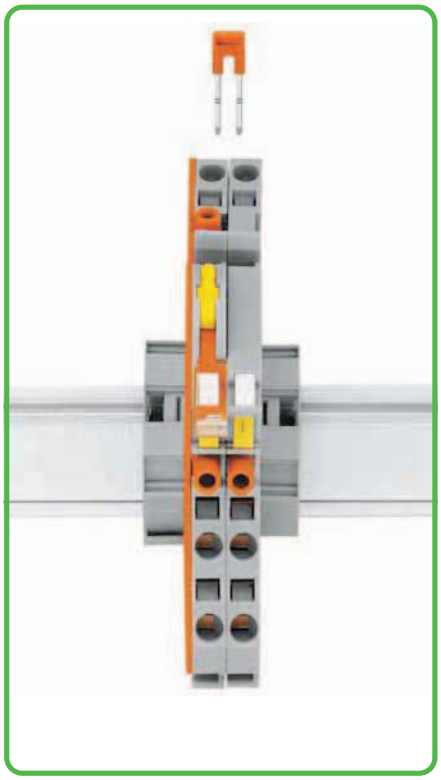

Terminal blocks required:

1 x disconnect/test terminal block	282-870
1 x through terminal block	282-865
1 x jumper, orange	282-424
1 x end plate, orange	282-386

in addition locking cover, lock-out

Measuring set for a single-phase voltage transformer

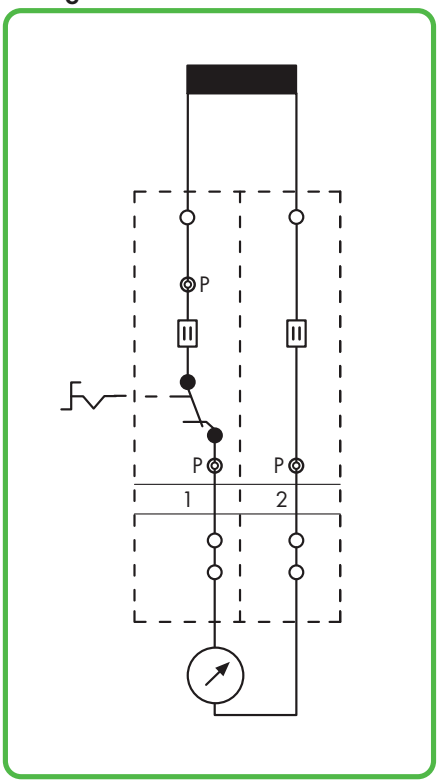

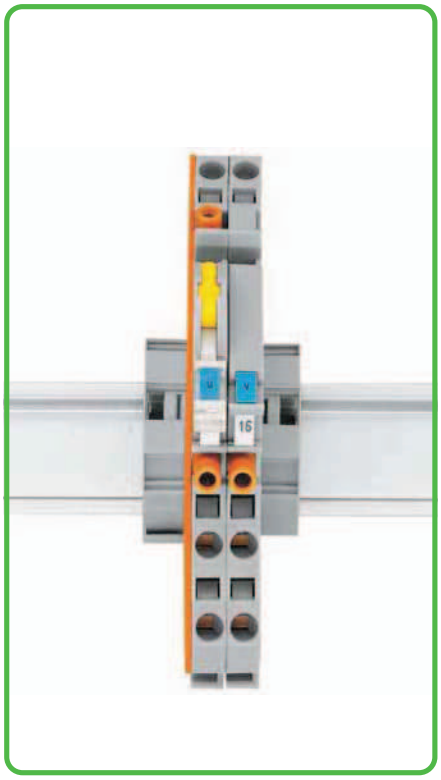

Terminal blocks required:

1 x disconnect/test terminal block	282-860
1 x through terminal block	282-866
1 x jumper, orange	282-424
1 x end plate, orange	282-386

in addition locking cover, lock-out

Measuring set for a 3-phase current transformer

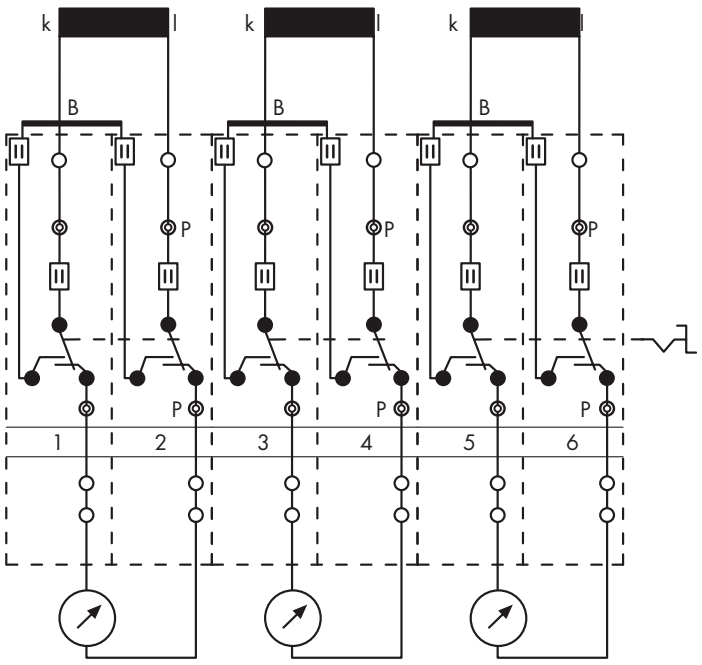

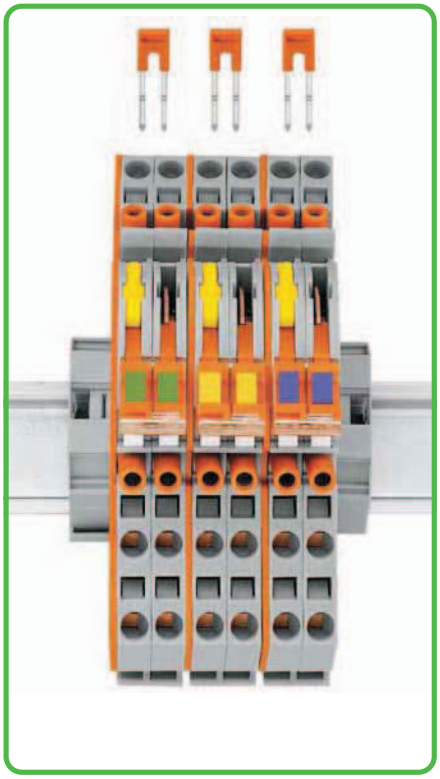

Pairs of disconnect links are interlocked by locking covers.
After the interlocking has been released, testing of the measured value is also possible.

B = shorting jumper, P = test socket

Terminal blocks required:

6 x disconnect/test terminal block	282-870
3 x jumper, orange	282-424
3 x end plate, orange	282-386

in addition locking links, locking covers, lock-outs

Measuring set for a 3-phase current transformer with 'Y' point

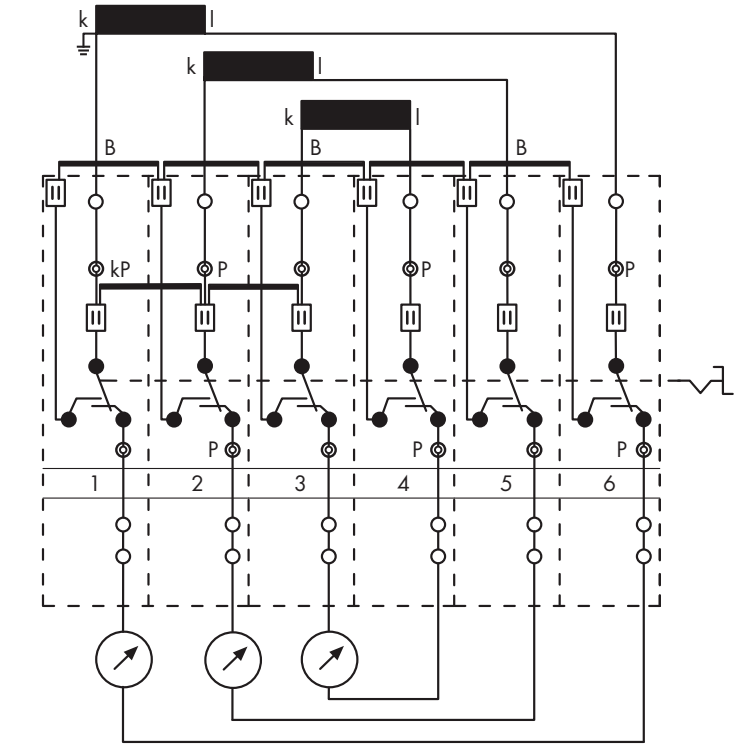

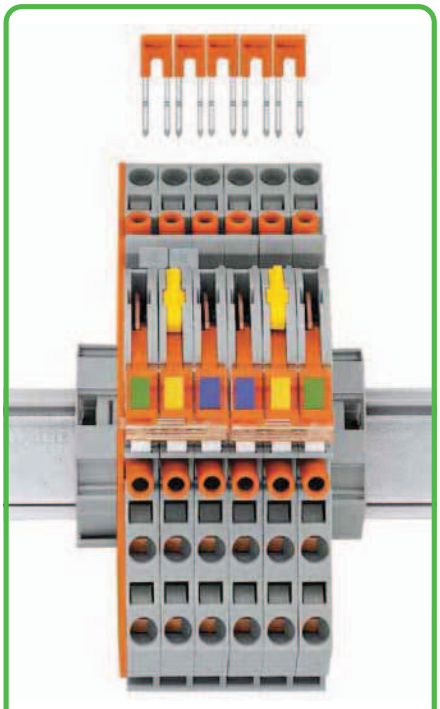

All 6 disconnect links are interlocked by the interlocking link.

kP = 'Y' point jumpers

Terminal blocks required:

6 x disconnect/test terminal block	282-870
5 x jumper, orange	282-424
2 x jumper, gray	282-402
1 x end plate, orange	282-386

in addition locking links, locking covers, lock-outs

Disconnect Terminal Blocks for Test and Measurement, 6 mm²/30 A, Through Terminal Blocks for Current and Voltage Transformer Circuits 282 Series

0.2 - 6 mm²	AWG 24 - 10	
500 V/6 kV/3 ❶	600 V, 30 A	
I_N 30 A	300 V, 5 A	
Terminal block width 8 mm / 0.315 in		
12 - 13 mm / 0.49 in ❷		

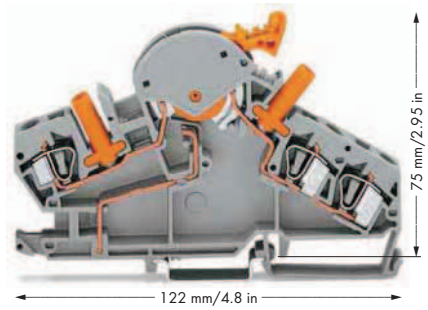

0.2 - 6 mm²	AWG 24 - 10	
500 V/6 kV/3 ❶	600 V, 30 A	
I_N 30 A	300 V, 5 A	
Terminal block width 8 mm / 0.315 in		
12 - 13 mm / 0.49 in ❷		

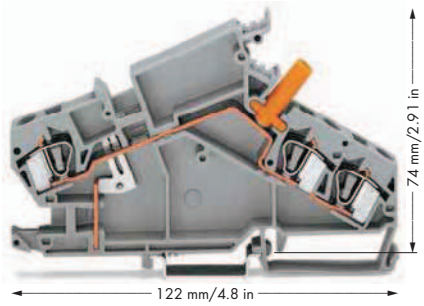

0.2 - 6 mm²	AWG 24 - 10	
500 V/6 kV/3 ❶	600 V, 30 A	
I_N 30 A	300 V, 5 A	
Terminal block width 8 mm / 0.315 in		
12 - 13 mm / 0.49 in ❷		

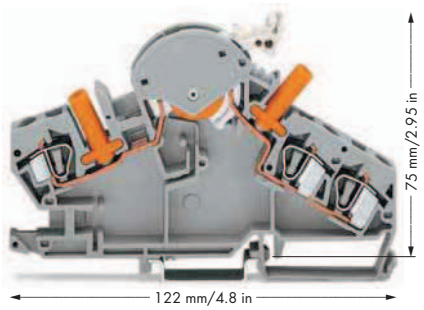

	Item No.	Pack. Unit
Disconnect terminal block for test and measurement, e.g., current transformer circuits, with touch-proof test sockets, orange disconnect link		
gray	**282-870** ❸ ❹	20

Item-Specific Accessories

End and separator plate, 1.5 mm thick, without use of lock-out seal			
	orange	**282-386**	50 (5x10)
	gray	**282-391**	50 (5x10)
End and separator plate, 1.5 mm thick, for use of lock-out seal			
	orange	**282-387**	50 (5x10)
	gray	**282-392**	50 (5x10)
Lock-out, for disconnect link			
	yellow	**282-384**	100 (5x20)
Locking cover, transparent, mechanically locks multiple links			
	1-pole	**282-881**	50 (5x10)
	2-pole	**282-882**	50 (5x10)
	3-pole	**282-883**	50 (5x10)
	4-pole	**282-884**	50 (5x10)
	5-pole	**282-885**	50 (5x10)
	6-pole	**282-886**	50 (5x10)
	7-pole	**282-887**	50 (5x10)
	8-pole	**282-888**	50 (5x10)
Interlocking link, mechanically locks multiple links, 1 m/3'3" long			
	transparent	**210-254**	1
Adjacent jumper, insulated, I_N 41 A			
	orange	**282-424**	100 (4x25)
WMB Multi marking system, 10 strips with 10 markers per card, for terminal widths 5 - 17.5 mm, yellow			
	k/l (50x)	**794-5553/000-002**	5

	Item No.	Pack. Unit
Through terminal block, e.g., current transformer circuits, with touch-proof test socket		
gray	**282-865** ❹	20

Item-Specific Accessories

End and separator plate, 1.5 mm thick			
	orange	**282-385**	50 (5x10)
	gray	**282-390**	50 (5x10)
WMB Multi marking system, 10 strips with 10 markers per card, for terminal widths 5 - 17.5 mm, yellow			
	k/l (50x)	**794-5553/000-002**	5

	Item No.	Pack. Unit
Disconnect terminal block for test and measurement, e.g., voltage transformer circuits, with touch-proof test sockets, light gray disconnect link		
gray	**282-860** ❸ ❹	20

Item-Specific Accessories

End and separator plate, 1.5 mm thick, without use of lock-out seal			
	orange	**282-386**	50 (5x10)
	gray	**282-391**	50 (5x10)
End and separator plate, 1.5 mm thick, for use of lock-out seal			
	orange	**282-387**	50 (5x10)
	gray	**282-392**	50 (5x10)
Lock-out, for disconnect link			
	yellow	**282-384**	100 (5x20)
Locking cover, transparent, mechanically locks multiple links			
	1-pole	**282-881**	50 (5x10)
	2-pole	**282-882**	50 (5x10)
	3-pole	**282-883**	50 (5x10)
	4-pole	**282-884**	50 (5x10)
	5-pole	**282-885**	50 (5x10)
	6-pole	**282-886**	50 (5x10)
	7-pole	**282-887**	50 (5x10)
	8-pole	**282-888**	50 (5x10)
Interlocking link, mechanically locks multiple links, 1 m/3'3" long			
	transparent	**210-254**	1
WMB Multi marking system, 10 strips with 10 markers per card, for terminal widths 5 - 17.5 mm, blue			
	U/V (50x)	**794-5554/000-006**	5

For list of approvals and user guide, see pages 634 to 637.