Triple-Deck Terminal Blocks 2.5 mm²
280 Series

0.08 - 2.5 mm²	AWG 28 - 12 *	
500 V/6 kV/3 ❶	300 V, 15 A	
I_N 20 A	300 V, 20 A	
Terminal block width 5 mm / 0.197 in		
8 - 9 mm / 0.33 in ❷		

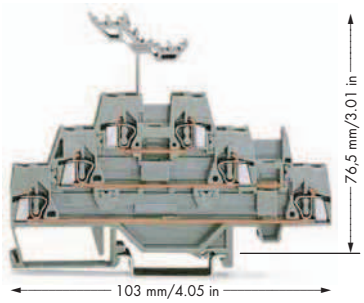

Item No.	Pack. Unit
Through/through/through terminal block	
gray **280-549**	40
blue **280-551**	40

Item-Specific Accessories

End and intermediate plate, 2.5 mm thick



orange	**280-304**	50 (2x25)
gray	**280-303**	50 (2x25)

Intermediate plate,

1.1 mm thick



orange	**280-336**	50 (2x25)

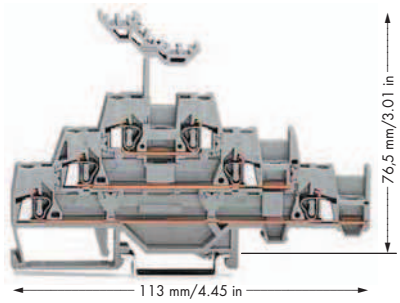

Item No.	Pack. Unit
Through/through/through terminal block with horizontal jumpering on lower level	
gray **280-550**	40

Item-Specific Accessories

End and intermediate plate, 2.5 mm thick



orange	**280-306**	50 (2x25)
gray	**280-305**	50 (2x25)

Intermediate plate,

1.1 mm thick



orange	**280-339**	50 (2x25)

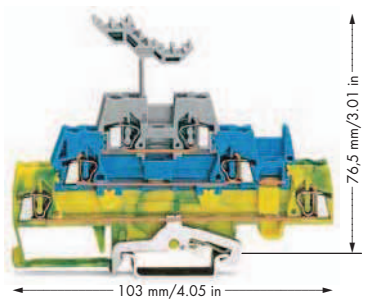

Item No.	Pack. Unit
Ground conductor/through/through terminal block	
green-yellow/blue/gray **280-547**	40
green-yellow/gray/gray **280-557**	40

Item-Specific Accessories

End and intermediate plate, 2.5 mm thick



orange	**280-304**	50 (2x25)
gray	**280-303**	50 (2x25)

Intermediate plate,

1.1 mm thick



orange	**280-336**	50 (2x25)

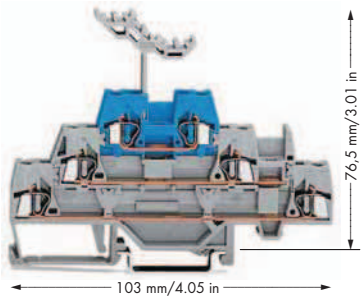

Item No.	Pack. Unit
Through/through/through terminal block	
gray/gray/blue **280-552**	40

Item-Specific Accessories

End and intermediate plate, 2.5 mm thick



orange	**280-304**	50 (2x25)
gray	**280-303**	50 (2x25)

Intermediate plate,

1.1 mm thick



orange	**280-336**	50 (2x25)

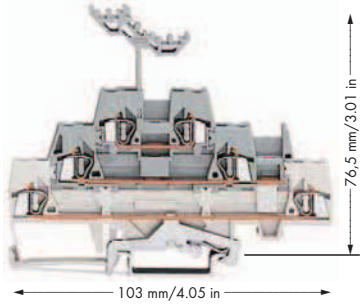

Item No.	Pack. Unit
Shield/through/through terminal block	
white/gray/gray **280-548**	40
white/blue/gray **280-558**	40

Item-Specific Accessories

End and intermediate plate, 2.5 mm thick



orange	**280-304**	50 (2x25)
gray	**280-303**	50 (2x25)

Intermediate plate,

1.1 mm thick



orange	**280-336**	50 (2x25)

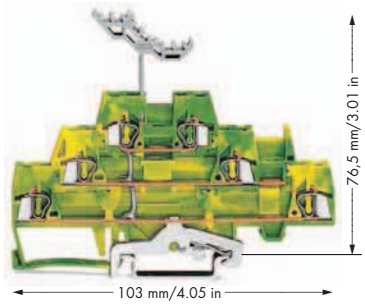

Item No.	Pack. Unit
6-conductor ground terminal block, internal commoning	
green-yellow **280-597**	40

Item-Specific Accessories

End and intermediate plate, 2.5 mm thick



orange	**280-304**	50 (2x25)
gray	**280-303**	50 (2x25)

Intermediate plate,

1.1 mm thick



orange	**280-336**	50 (2x25)

For list of approvals and user guide, see pages 634 to 637.