SIEMENS

Data sheet 3LD2064-0TB53



Figure similar

EMERG. STOP SWITCH 3-POLE IU=16, P/AC-23A AT 400V=7.5KW 1 N-TERMINAL + 1 PE-TERMINAL INSULATION-ENCLOSED, IP65 ROTARY ACTUATOR RED/YELLOW (EMERG. STOP)

Model		
product brand name		SENTRON
Product designation		Main and EMERGENCY-STOP switches
Design of the operating mechanism		rotary actuator, red/yellow
Type of the driving mechanism / motor drive		No

General technical data		
Number of poles		3
Type of device		fixed mounting
Protection against electrical shock		finger-safe
Mechanical service life (switching cycles) / of the main contacts / typical		100 000
Operating frequency / maximum	1/h	50

Voltage		
Insulation voltage / Rated value	V	690
Surge voltage resistance / Rated value	V	6 000

Protection class		
Protection class IP		IP65

Electricity		
Continuous current / Rated value	A	16
Short-time current resistance (Icw) / at 690 V / limited to 1 s / Rated value	A	340

Main circuit		
Operating frequency		
• initial value	Hz	50

Changes preserved
© Copyright Siemens AG

• Full-scale value	Hz	60
Operating power		
• at AC-23 A / at 400 V / Rated value	kW	7.5
• at AC-23 A / at 690 V / Rated value	kW	7.5
• at AC-3 / at 400 V / Rated value	kW	5.5
• at AC-3 / at 690 V / Rated value	kW	5.5
Operating voltage		
• with AC / at 50/60 Hz / Rated value	V	690
Operating current / at AC-21 / Rated value	A	16

Auxiliary circuit

Number of CO contacts / for auxiliary contacts		0
Number of NC contacts / for auxiliary contacts		0
Number of NO contacts / for auxiliary contacts		0
Operating voltage / of the auxiliary contacts / with AC / maximum	V	500
Continuous current / of the auxiliary contact / Rated value	A	10
Insulation voltage / of the auxiliary switch / Rated value	V	500

Suitability

Suitability for use		
• Main switch		Yes
• switch disconnector		Yes
• EMERGENCY OFF switch		Yes
• safety switch		Yes
• maintenance/repair switch		Yes

Product details

Product feature / interlock		Yes
Product expansion / optional		
• motor drive		No
• Voltage trigger		No

Connections

Connectable conductor cross-section		
• for main contacts		
— single or multi-stranded / minimum	mm²	1
— single or multi-stranded / maximum	mm²	6
— finely stranded / with core end processing / maximum	mm²	4
— stranded / minimum	mm²	1
— stranded / maximum	mm²	6
• for auxiliary contacts		

Changes preserved
© Copyright Siemens AG

— single or multi-stranded / minimum	mm²	0.75
— single or multi-stranded / maximum	mm²	4
— finely stranded / with core end processing / minimum	mm²	0.75
— finely stranded / with core end processing / maximum	mm²	2.5
— stranded / minimum	mm²	0.75
— stranded / maximum	mm²	4
Type of connectable conductor cross-section		
• for main contacts / finely stranded / with core end processing		4
• for auxiliary contacts		
— solid		50
— finely stranded / with core end processing		2x (0.75 ... 1.5 mm2), 1x 2.5 mm2
Type of electrical connection		
• for main current circuit		connection terminals
• for auxiliary contacts		connection terminals

Requirements

Design of the fuse link		
• for short-circuit protection of the main circuit / required		fuse gL/gG: 20 A
• for short-circuit protection of the auxiliary switch / required		fuse gL/gG: 10 A

Mechanical Design

Height	mm	152
Width	mm	100
Depth	mm	117
Mounting type		floor mounting
Mounting type		
• front mounting		No
• front mounting with 4-hole attachment		No
• front mounting with central attachment		Yes
• Side-by-side mounting		No
• rail mounting		No
Net weight	g	465

Environmental conditions

Ambient temperature		
• during operation / minimum	°C	-25
• during operation / maximum	°C	55

Certificates

Equipment marking		

Changes preserved
© Copyright Siemens AG

• acc. to DIN EN 61346-2	S

General Product Approval

CCC CSA GOST UL VDE

General Product Approval	Declaration of Conformity	Test Certificates	Shipping Approval		other
other	EG-Konf.	Special Test Certificate	GL	LRS	Environmental Confirmations

Further information

Information- and Downloadcenter (Catalogs, Brochures,…)
http://www.siemens.com/lowvoltage/catalogs

Industry Mall (Online ordering system)
https://eb.automation.siemens.com/mall/en/WW/Catalog/Product/3LD20640TB53

Service&Support (Manuals, Certificates, Characteristics, FAQs,...)
http://support.automation.siemens.com/WW/view/en/3LD20640TB53/all

Image database (product images, 2D dimension drawings, 3D models, device circuit diagrams, ...)
http://www.automation.siemens.com/bilddb/cax_en.aspx?mlfb=3LD20640TB53

CAx-Online-Generator
http://www.siemens.com/cax

Tender specifications
http://ausschreibungstexte.siemens.com/tiplv

Changes preserved
© Copyright Siemens AG

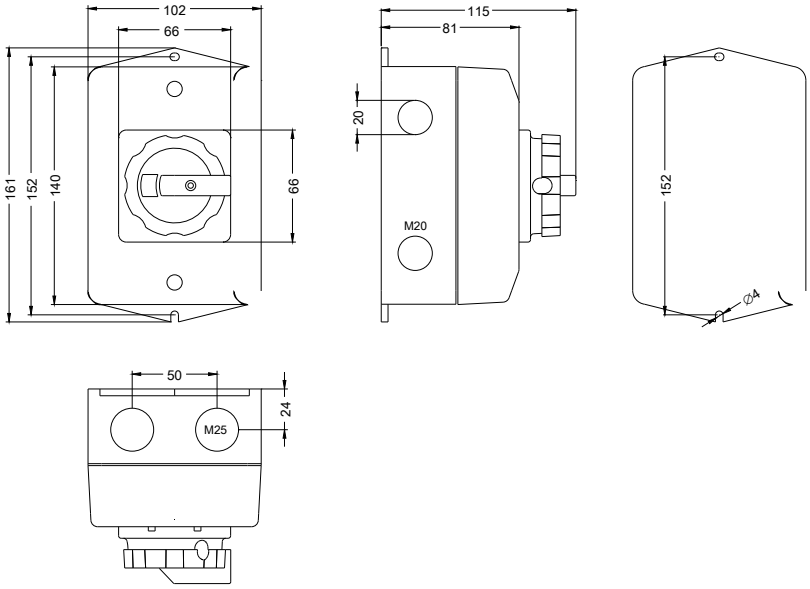

last modified: 05.05.2015

Changes preserved
© Copyright Siemens AG