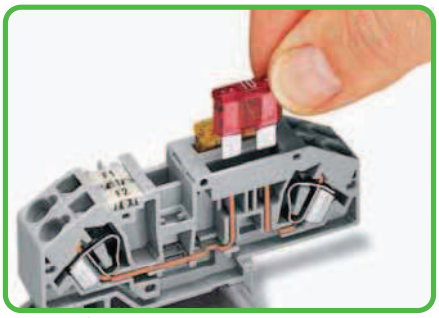

Inserting a fuse.

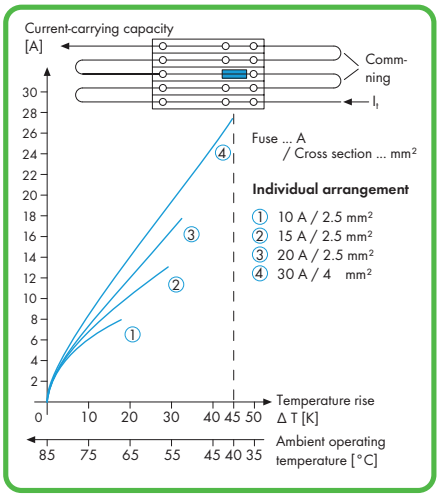

Diagram: Individual arrangement

❶ 400 V = rated voltage
6 kV = rated surge voltage
3 = pollution degree
(also see Section 14)

❷ Electrical ratings are given by the fuse (also see pages 234 – 235).

❸ Strip length, see packaging or instructions.



Blown fuse indication by LED.

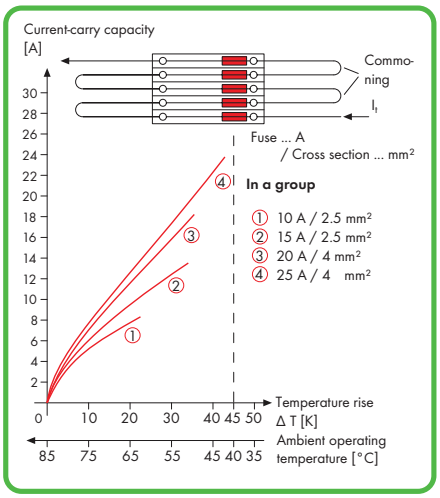

Diagram: Block arrangement

Information from the mini-automotive blade-type fuse manufacturers

Derating T_{amb} / °C	%	F_T
– 25	14	0.877
– 20	13	0.885
– 15	12	0.893
– 10	11	0.901
– 5	10	0.909
0	9	0.917
5	8	0.926
10	6	0.943
15	4	0.962
20	2	0.980
23	0	1.000
30	– 2	1.020
35	– 4	1.042
40	– 6	1.064
45	– 8	1.087
50	– 10	1.111
55	– 13	1.149
60	– 16	1.190
65	– 19	1.235
70	– 22	1.282

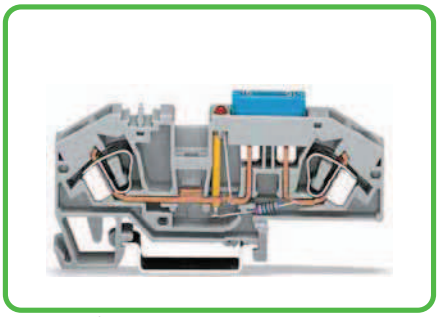

2-conductor fuse terminal block with mini-automotive blade-style fuse.

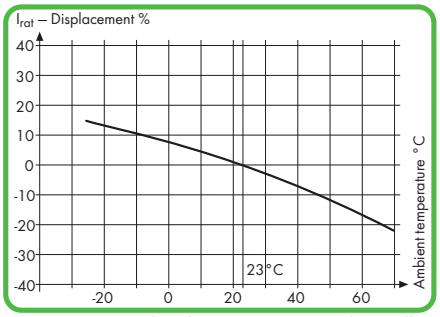

The rated currents of the fuse cartridges are defined differently in international standards.
Due to the different current rating definitions, the recommended current-carrying permanent capacity of the fuses is max. 80% of their rated current according to DIN 72581 part 3 (for an ambient operating temperature of 23 °C).
Selecting the correct fuse cartridge is important for product safety within applications, as well as for fuse cartridge service life and operational reliability of the fuse cartridges. Fuse cartridges can operate perfectly as protection (break-off point) if they are properly selected and are used in accordance with manufacturer specifications.

With regard to the product safety, it is in general necessary to test fuse cartridges under normal conditions and operational failures within your application.

Fuse Disconnect Terminal Blocks with Pivoting Fuse Holder, for Miniature Metric Fuses, 281 Series

Blown fuse indication



Blown fuse indication by LED or neon lamp.

Fuse replacement



Before replacing the fuse, pivot the fuse holder in the locked open position.

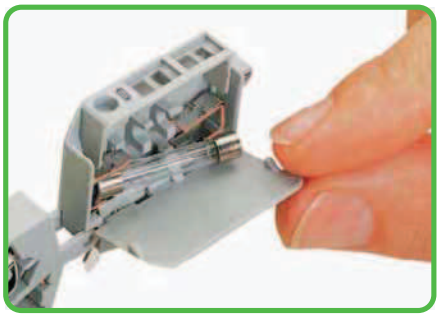

One end of the fuse is automatically ejected from the holder when opening the cover.

CAGE CLAMP® connection

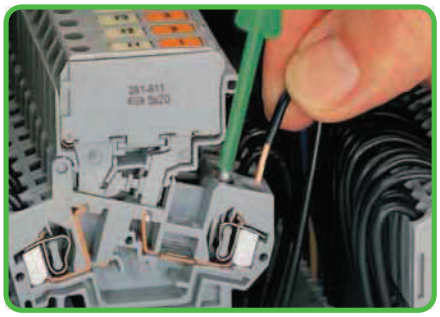

Conductor termination

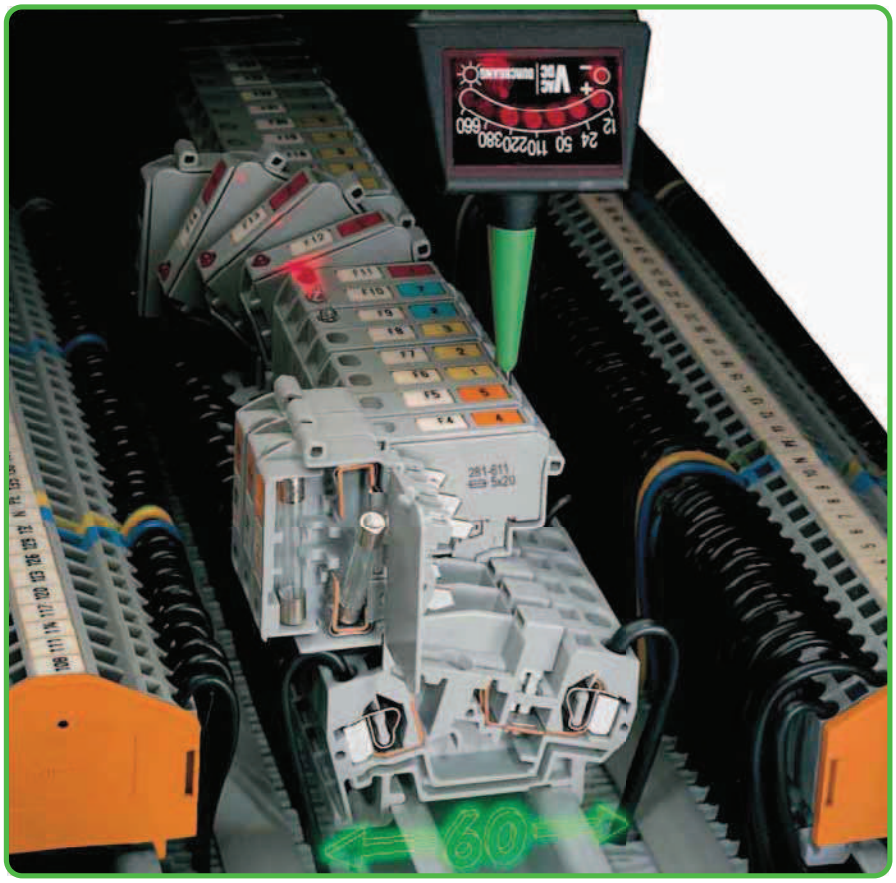

Commoning

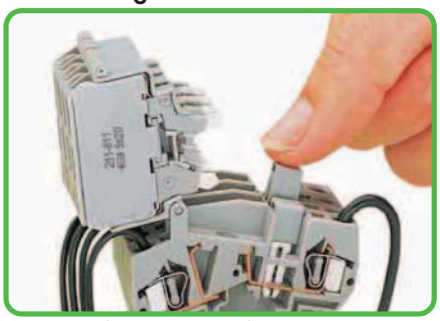

Distribution of current to several fuse-protected circuits via insulated touchproof jumpers.

Testing

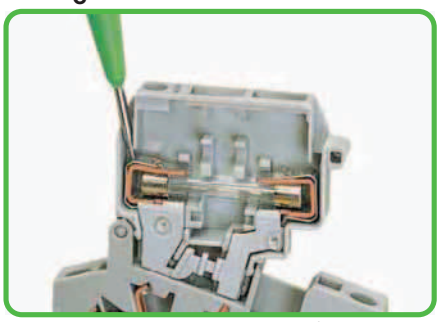

Voltage test, either at input or output with fuse holder in closed position (live).

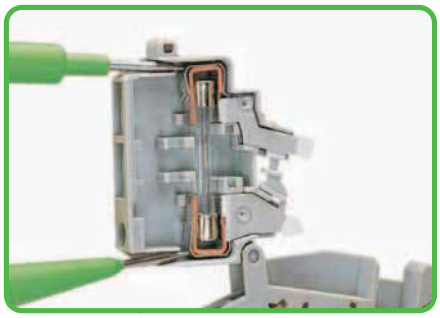

Through test with fuse holder in open position (no voltage).

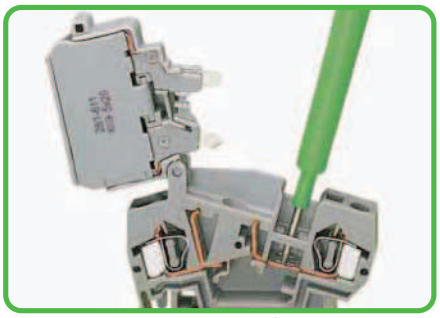

Voltage test at input in the test slot of the current bar.



CAGE CLAMP® clamps the following copper conductors:*

solid



stranded



fine-stranded, also with tinned single strands

* For aluminum conductors, see notes in Section 14.

Fuse replacement (continued)



The fuse can be easily removed by hand.

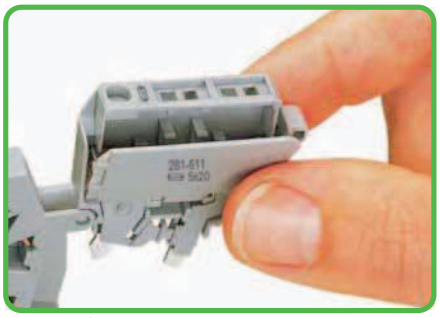

Insert new fuse snap the cover closed.

Spare fuse

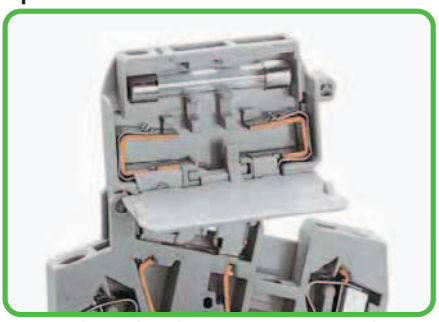

Storage of spare fuse (fuse holder without blown fuse indication).

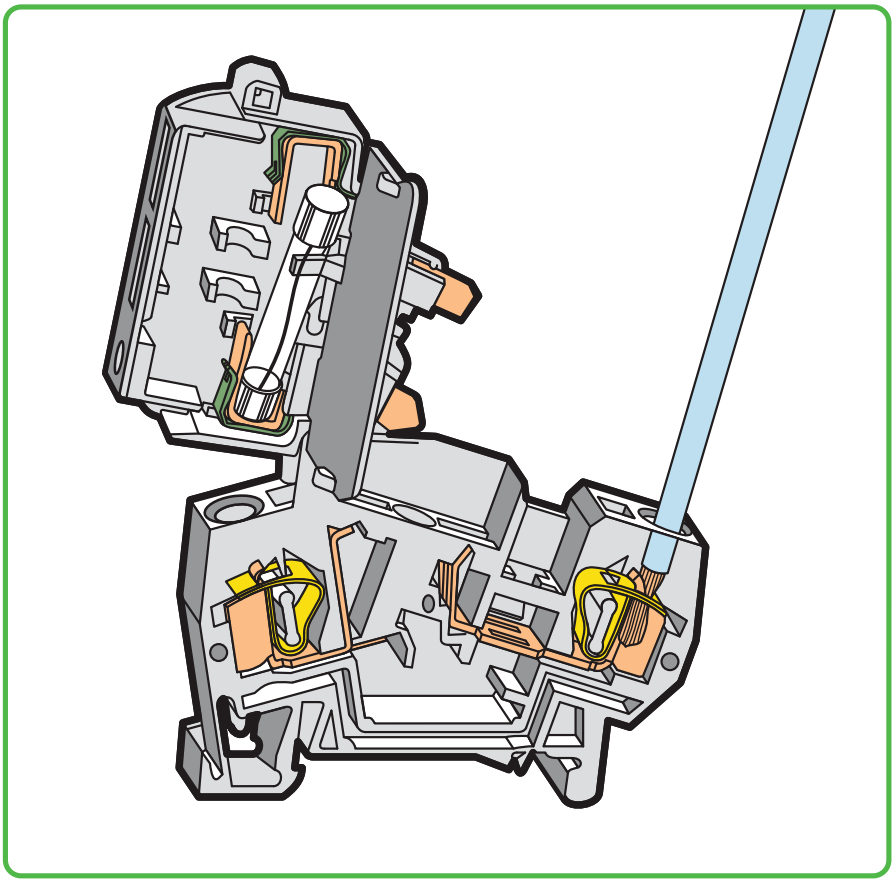

Touchproof protection



"Touchproof" protection in all positions of the fuse holder.

Locked position

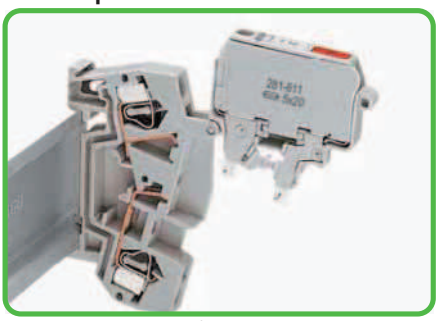

Fuse holder will remain safely locked open in vertical assemblies.

Testing (continued)



Testing voltage at the output via separate test slot.

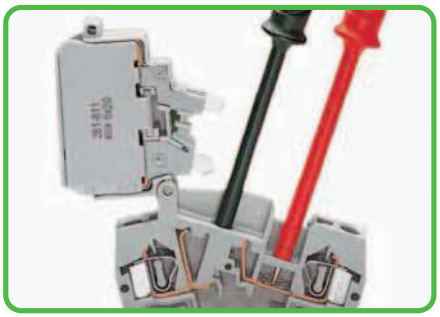

Current measuring between jumper slot and separate test slot.

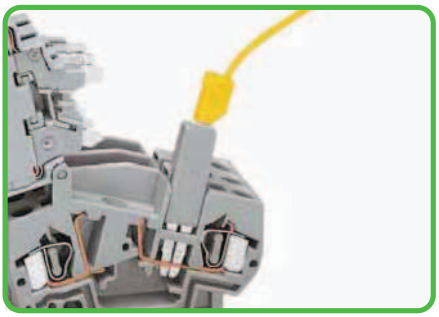

Voltage testing at input via 280-404 test plug adapter (shown) or 281-407 test plug.



fine-stranded, tip-bonded



fine-stranded, with ferrule ❶ (gastight crimped)



fine-stranded, with pin terminal (gastight crimped)

❶ When using ferrules, the max. conductor cross section accommodated is one size smaller than max. rating of terminal block.

Fuse Disconnect Terminal Blocks with Pivoting Fuse Holder 4 mm² for Miniature Metric Fuses 5 x 20 mm, 5 x 25 mm and 5 x 30 mm
281 Series

0.08 - 4 mm²	AWG 28 - 12	
800 V/8 kV/3 ❶ ❷	600 V, 10 A	
I_N 10 A (6.3 A)	600 V, 10 A	
Terminal block width 8 mm / 0.315 in		
9 - 10 mm / 0.37 in ❸		

0.08 - 4 mm²	AWG 28 - 12	
800 V/8 kV/3 ❶ ❷	30 V, 10 A	
I_N 10 A (6.3 A)	230 V, 10 A	
Terminal block width 8 mm / 0.315 in		
9 - 10 mm / 0.37 in ❸		

0.08 - 4 mm²	AWG 28 - 12	
800 V/8 kV/3 ❶ ❷	220 V, 10 A	
I_N 10 A (6.3 A)	230 V, 10 A	
Terminal block width 8 mm / 0.315 in		
9 - 10 mm / 0.37 in ❸		

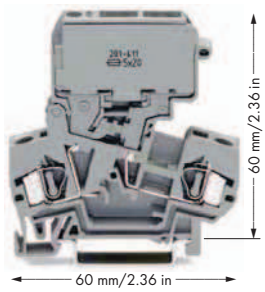

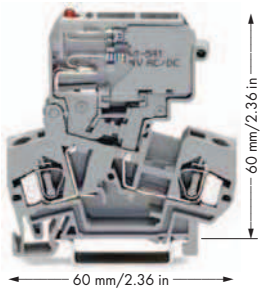

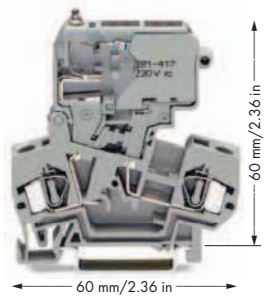

	Item No.	Pack. Unit
Fuse disconnect terminal block with pivoting fuse holder,		
for miniature metric fuses 5 x 20 mm,		
without blown fuse indication,		
Nominal voltage and current are given by the fuse.		
○ gray	**281-611**	50
● orange	**281-616**	50
Fuse disconnect terminal block with pivoting fuse holder,		
for miniature metric fuses 5 x 25 mm,		
without blown fuse indication,		
Nominal voltage and current are given by the fuse.		
○ gray	**281-612**	50
Fuse disconnect terminal block with pivoting fuse holder,		
for miniature metric fuses 5 x 30 mm,		
without blown fuse indication,		
Nominal voltage and current are given by the fuse.		
○ gray	**281-622**	50
Miniature metric fuse on request		

	Item No.	Pack. Unit
Fuse disconnect terminal block with pivoting fuse holder,		
for miniature metric fuses 5 x 20 mm,		
with blown fuse indication by LED, gray		
Nominal voltage and current are given by the LED or fuse.		
Leakage current in case of blown fuse: LED 6mA		
○ 15 - 30 V	**281-611/281-541**	50
○ 30 - 65 V	**281-611/281-542**	50
Fuse disconnect terminal block with pivoting fuse holder,		
for miniature metric fuses 5 x 25 mm,		
with blown fuse indication by LED, gray		
Nominal voltage and current are given by the LED or fuse.		
Leakage current in case of blown fuse: LED 6mA		
○ 15 - 30 V	**281-612/281-541**	50
○ 30 - 65 V	**281-612/281-542**	50
Fuse disconnect terminal block with pivoting fuse holder,		
for miniature metric fuses 5 x 30 mm,		
with blown fuse indication by LED, gray		
Nominal voltage and current are given by the LED or fuse.		
Leakage current in case of blown fuse: LED 6mA		
○ 15 - 30 V	**281-622/281-541**	50
○ 30 - 65 V	**281-622/281-542**	50
Miniature metric fuse on request		

	Item No.	Pack. Unit
Fuse disconnect terminal block with pivoting fuse holder,		
for miniature metric fuses 5 x 20 mm,		
with blown fuse indication by neon lamp, gray		
Nominal voltage and current are given by the LED or fuse.		
Leakage current in case of blown fuse: Neon lamp < 0.4mA		
○ 230 V	**281-611/281-417**	50
○ 120 V	**281-611/281-418**	50
Fuse disconnect terminal block with pivoting fuse holder,		
for miniature metric fuses 5 x 25 mm,		
with blown fuse indication by neon lamp, gray		
Nominal voltage and current are given by the LED or fuse.		
Leakage current in case of blown fuse: Neon lamp < 0.4mA		
○ 230 V	**281-612/281-417**	50
○ 120 V	**281-612/281-418**	50
Fuse disconnect terminal block with pivoting fuse holder,		
for miniature metric fuses 5 x 30 mm,		
with blown fuse indication by neon lamp, gray		
Nominal voltage and current are given by the LED or fuse.		
Leakage current in case of blown fuse: Neon lamp < 0.4mA		
○ 230 V	**281-622/281-417**	50
○ 120 V	**281-622/281-418**	50
Miniature metric fuse on request		

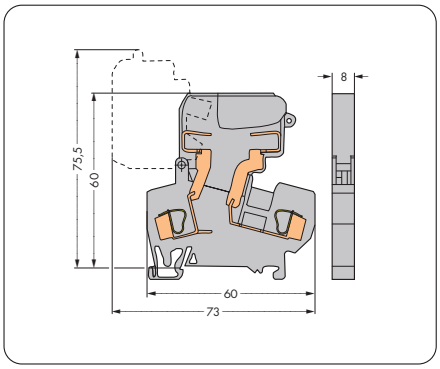

Dimensions in mm

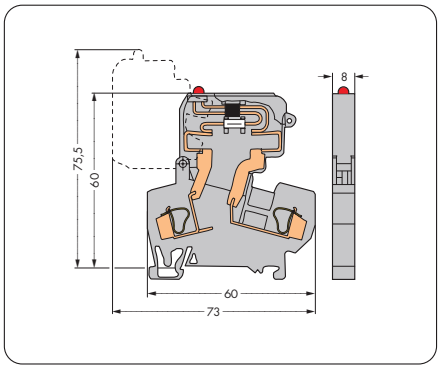

Dimensions in mm

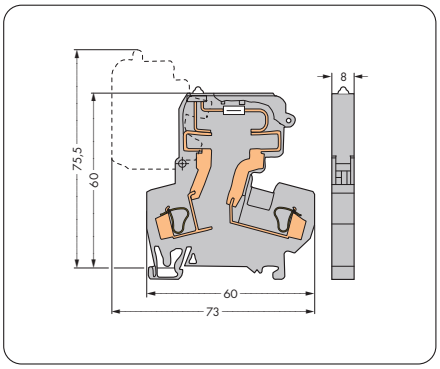

Dimensions in mm

For list of approvals and user guide, see pages 634 to 637.