Karta danych technicznych
T piece hood



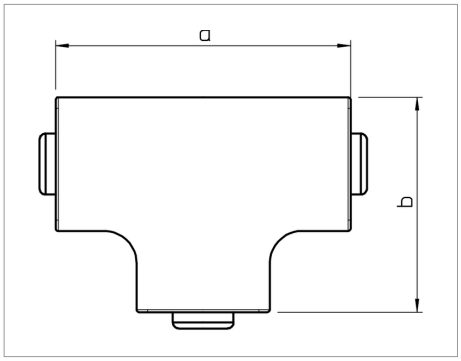

T piece cover for changing the direction of the WDK trunking.

Type	Colour	Dimension a mm	Dimension b mm	Pack. pcs	Weight kg/100 pcs.	Nr kat.
WDK HT15030RW	Pure white; RAL 9010	73	53	4	1.000	6192459
WDK HT15030CW	Cream; RAL 9001	73	53	4	1.000	6161928
WDK HT15030GR	Stone grey; RAL 7030	73	53	4	1.000	6158463

PVC Polyvinylchloride /pc.

CE

Legenda

CE Communautés Européennes, EC declaration of conformity according to EC directives