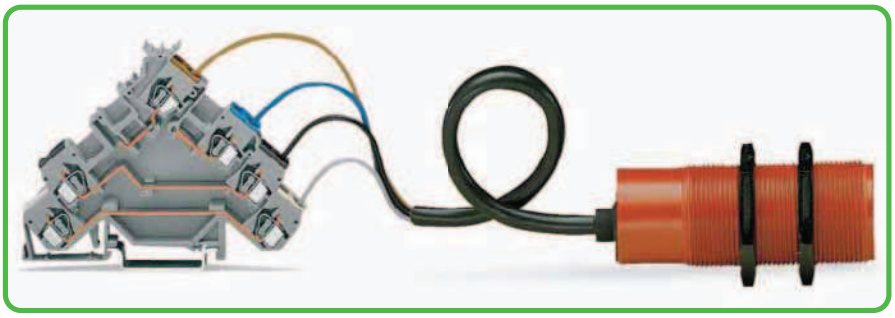

Sensor terminal block with 4-conductor sensor

* AWG 12: THHN, THWN

❶ 400 V = rated voltage
6 kV = rated surge voltage
3 = pollution degree
(also see Section 14)

❷ Electrical ratings are given by the fuse plug or empty component plug housing.

❸ Strip length, see packaging or instructions.

❹ For empty component plug housings, see interface modules
x=12 mm/0.472 in
For fuse plugs, see page 230
x = 15.5 mm/0.61 in
y = 10 mm/0.394 in

❺ See application notes for:
Insulation stop, page 199

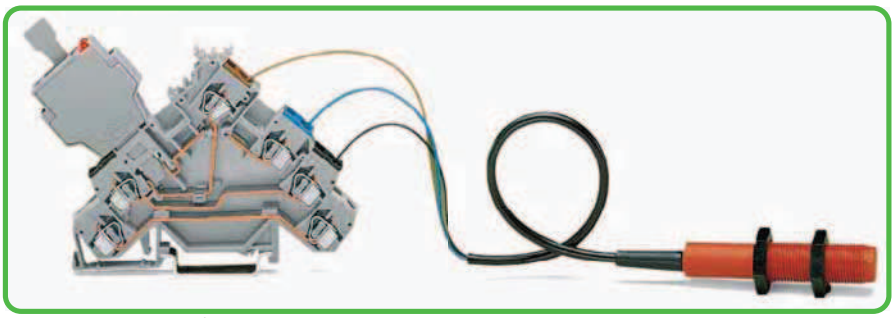

Sensor terminal block with fuse plug, including 3-conductor sensor



The fuse plug is 1 mm/0.039 in wider than the terminal block. This means an intermediate plate has to be fitted.

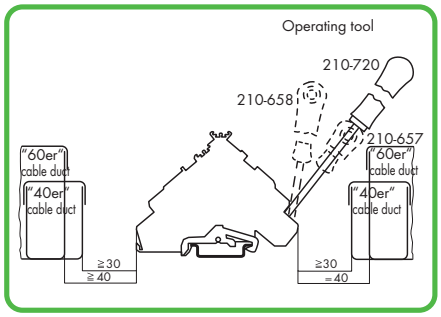

Min. mounting distance – terminal blocks to cable duct

280 Series Accessories

Appropriate marking system:
WMB (see Section 13)

End and intermediate plate, 1 mm thick,			
	for quadruple-deck terminal blocks		
	orange	**280-323**	100 (4x25)
	gray	**280-320**	100 (4x25)
Insulation stop,			
❺ 	5 pcs/strip,		
	0.08 - 0.2 mm² "s" (0.14 mm² "f-st")		
	white	**280-470**	200 (8x25)
Insulation stop,			
❺ 	5 pcs/strip,		
	0.25 - 0.5 mm²		
	light gray	**280-471**	200 (8x25)
Insulation stop,			
❺ 	5 pcs/strip,		
	0.75 - 1 mm²		
	dark gray	**280-472**	200 (8x25)
Adjacent jumper, insulated,			
	I_N = I_N terminal block		
	gray	**280-402**	200 (8x25)
Screwless end stop,			
	for DIN 35 rail,		
	6 mm wide		
	gray	**249-116**	100 (4x25)
Screwless end stop,			
	for DIN 35 rail,		
	10 mm wide		
	gray	**249-117**	50 (2x25)

Sensor LED Terminal Blocks 2.5 mm² for 4-Conductor Sensors 280 Series

CAGE CLAMP®

0.08 - 2.5 mm²	AWG 28 - 12 *
24 VDC ❶	24 V, 15 A
20 A	
Terminal block width 5 mm / 0.197 in	
8 - 9 mm / 0.33 in ❷	

0.08 - 2.5 mm²	AWG 28 - 12 *
24 VDC ❶	24 V, 15 A
20 A	300 V, 15 A
Terminal block width 5 mm / 0.197 in	
8 - 9 mm / 0.33 in ❷	



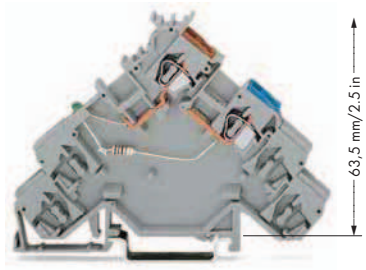

Circuit I Circuit II

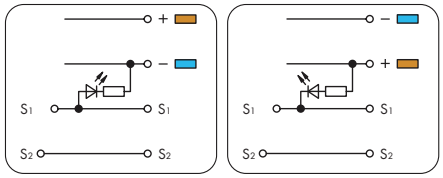

Circuit I Circuit II

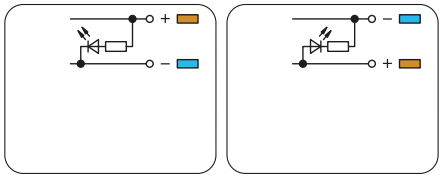

* AWG 12: THHN, THWN

❶ Other voltages upon request.

❷ Strip length, see packaging or instructions.

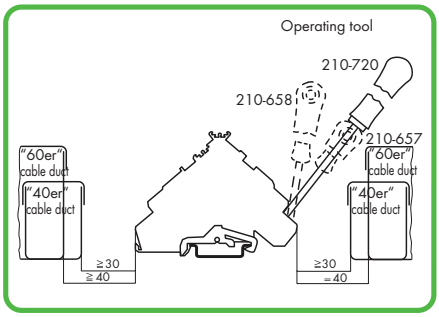

Min. mounting distance – terminal blocks to cable duct

Item No.		Pack. Unit
Sensor LED terminal block,		
for PNP (positive) switching sensors,		
red LED, 24 VDC, LED power consumption: 4.8 mA		
◯ Circuit I	**280-580/281-434**	50
Sensor LED terminal block,		
for NPN (negative) switching sensors,		
red LED, 24 VDC, LED power consumption: 4.8 mA		
◯ Circuit II	**280-581/281-413**	50

Item No.		Pack. Unit
Sensor LED supply terminal block,		
power supply from sensor side,		
for PNP (positive) switching sensors,		
green LED, 24 VDC, LED power consumption: 4.8 mA		
◯ Circuit I	**280-584/281-483**	10
Sensor LED supply terminal block,		
power supply from sensor side,		
for NPN (negative) switching sensors,		
green LED, 24 VDC, LED power consumption: 4.8 mA		
◯ Circuit II	**280-586/281-496**	10

280 Series Accessories

Appropriate marking system:
WMB (see Section 13)

End and intermediate plate, 1 mm thick, for quadruple-deck terminal blocks			
orange	**280-323**	100 (4x25)	
gray	**280-320**	100 (4x25)	
Insulation stop, 5 pcs/strip, 0.08 - 0.2 mm² "s" (0.14 mm² "f-st")			
white	**280-470**	200 (8x25)	

Insulation stop, 5 pcs/strip, 0.25 - 0.5 mm²			
light gray	**280-471**	200 (8x25)	
Insulation stop, 5 pcs/strip, 0.75 - 1 mm²			
dark gray	**280-472**	200 (8x25)	



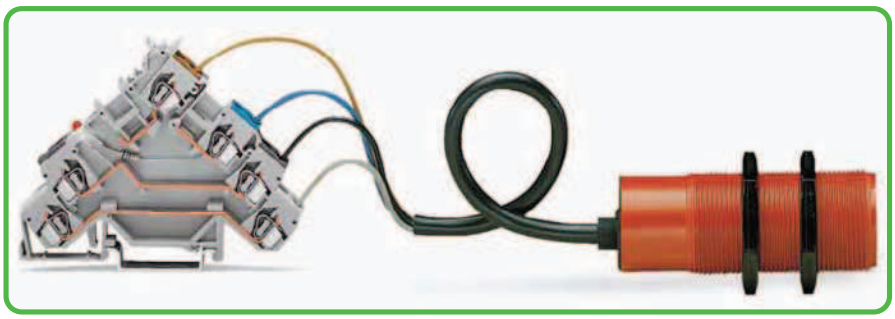

Sensor LED terminal block with 4-conductor sensor

For list of approvals and user guide, see pages 634 to 637.

Actuator Terminal Blocks 2.5 mm²
for Pressure Switches, Thermocouples, etc.
Serie 280

0.08 - 2.5 mm²	AWG 28 - 12 *
400 V/6 kV/3 ❶	300 V, 15 A
I_N 20 A	300 V, 15 A
Terminal block width 5 mm / 0.197 in	
8 - 9 mm / 0.33 in ❷	

0.08 - 2.5 mm²	AWG 28 - 12 *
400 V/6 kV/3 ❶	300 V, 15 A
I_N 20 A	300 V, 15 A
Terminal block width 6 mm / 0.236 in	
8 - 9 mm / 0.33 in ❷	

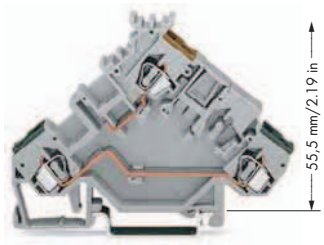



Circuit I Circuit II

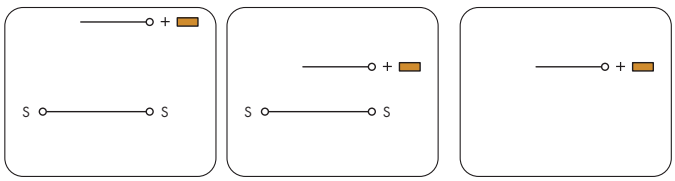

* AWG 12: THHN, THWN

❶ 400 V = rated voltage
6 kV = rated surge voltage
3 = pollution degree
(also see Section 14)

❷ Strip length, see packaging or instructions.

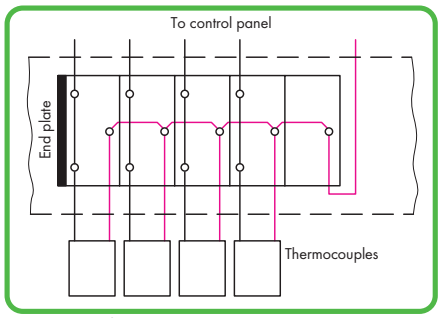

Power supply from actuator side

	Item No.	Pack. Unit
Actuator terminal block		
Circuit I	**280-555**	50
Actuator terminal block, (no picture)		
Circuit II	**280-554**	50

	Item No.	Pack. Unit
Actuator supply terminal block, in connection with 280-555: power supply from control cabinet side, in connection with 280-554: power supply from actuator side, with end plate		
	280-556	20

280 Series Accessories

Appropriate marking system:
WMB (see Section 13)

End and intermediate plate, 1 mm thick, for triple-deck terminal blocks			
orange	**280-321**	100 (4x25)	
gray	**280-319**	100 (4x25)	
Insulation stop, 5 pcs/strip, 0.08 - 0.2 mm² "s" (0.14 mm² "f-st")			
white	**280-470**	200 (8x25)	
Screwless end stop, for DIN 35 rail, 6 mm wide			
gray	**249-116**	100 (4x25)	

Insulation stop, 5 pcs/strip, 0.25 - 0.5 mm²		
light gray	**280-471**	200 (8x25)
Insulation stop, 5 pcs/strip, 0.75 - 1 mm²		
dark gray	**280-472**	200 (8x25)
Screwless end stop, for DIN 35 rail, 10 mm wide		
gray	**249-117**	50 (2x25)

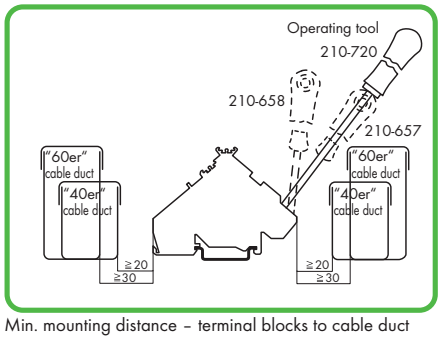

Min. mounting distance – terminal blocks to cable duct

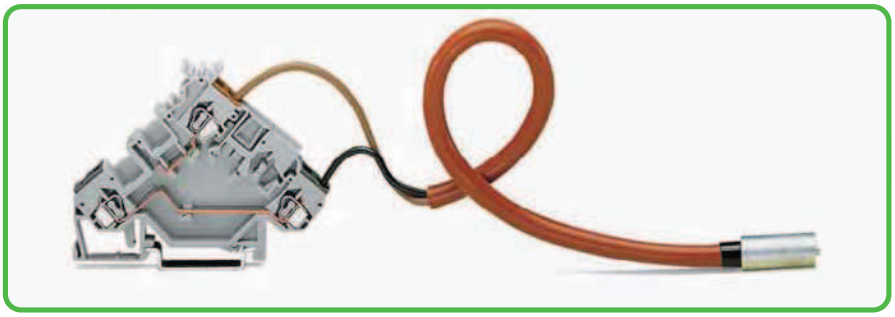

Actuator terminal block paired with a thermocouple

For list of approvals and user guide, see pages 634 to 637.

Actuator Terminal Blocks 2.5 mm² for Magnetic Valves, Servomotors, etc.
280 Series

0.08 - 2.5 mm² 400 V/6 kV/3; 20 A ❶ ❷ 250 V/4 kV/3; 20 A ❶ ❷ Terminal block width 5 mm / 0.197 in 8 - 9 mm / 0.33 in ❸	AWG 28 - 12 * 300 V, 15 A 300 V, 15 A	0.08 - 2.5 mm² 125 V/5 A ❷ 250 V/6.3 A ❷ Terminal block width 5 mm / 0.197 in 8 - 9 mm / 0.33 in ❸	AWG 28 - 12 * 300 V, 6 A 300 V, 15 A	0.08 - 2.5 mm² 400 V/6 kV/3 ❶ I_N 10 A Terminal block width 5 mm / 0.197 in 8 - 9 mm / 0.33 in ❸	AWG 28 - 12 * 300 V, 10 A 300 V, 15 A

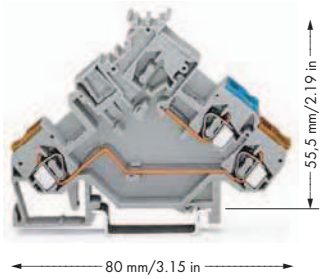

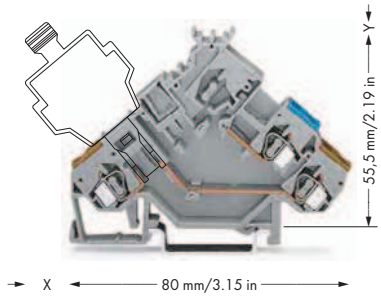

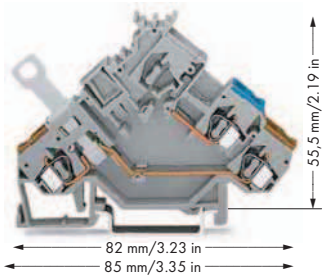

Circuit I Circuit II

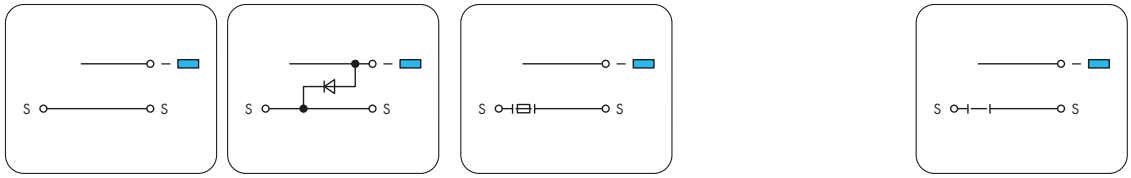

Item No.	Pack. Unit
Actuator terminal block	
◯ Circuit I **280-562**	50
Actuator terminal block,	
with recovery diode 1N4007	
◯ Circuit II **280-562/281-411**	50

Item No.	Pack. Unit
Actuator terminal block,	
for fuse plugs,	
for fuse protection of line voltage, without end plate	
◯ **280-565** ❹	50

Item No.	Pack. Unit
Actuator disconnect terminal block,	
for interruption of line	
◯ **280-566**	50

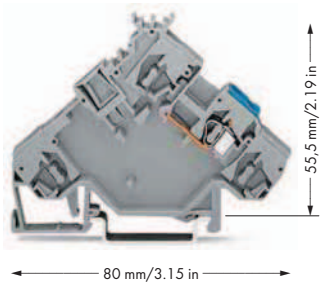

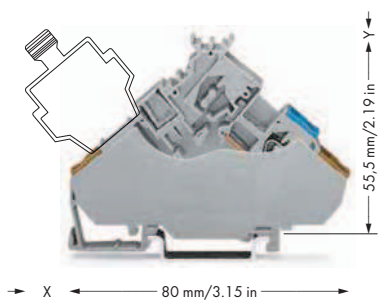

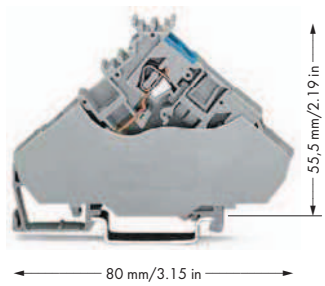

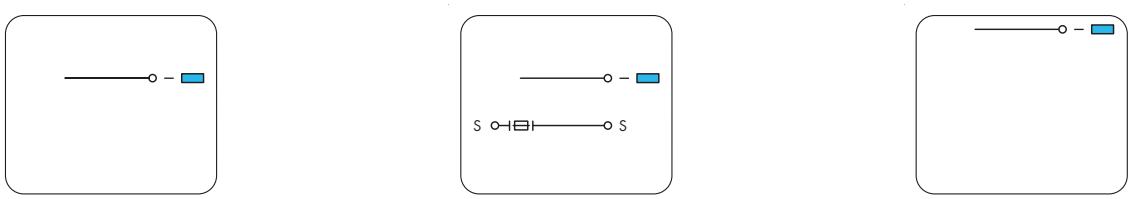

Item No.	Pack. Unit
Actuator supply terminal block,	
power supply form actuator side	
◯ **280-592**	10

Item No.	Pack. Unit
Actuator terminal block,	
for fuse plugs,	
for fuse protection of line voltage, with end plate	
◯ gray **280-565/280-319**	50
◯ gray **280-565/280-321**	50

Item No.	Pack. Unit
Actuator supply terminal block,	
power supply from control panel side,	
with end plate	
◯ **280-568**	20
Technical data:	
400 V/6 kV/3	I_N 20 A

For list of approvals and user guide, see pages 634 to 637.

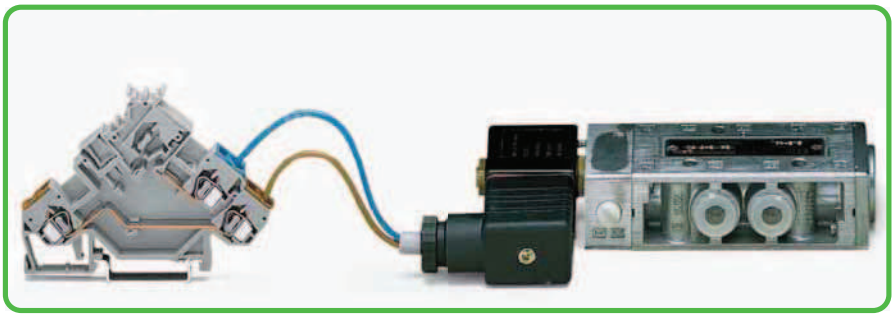

Actuator terminal block paired with a magnetic valve

* AWG 12: THHN, THWN

❶ 400 V/250 V = rated voltage
6 kV/4 kV = rated surge voltage
3 = pollution degree
(also see Section 14)

❷ Electrical ratings are given by the fuse plug or empty component plug housing.

❸ Strip length, see packaging or instructions.

❹ For empty component plug housings, see interface modules
x=12 mm/0.472 in
For fuse plugs, see page 232
x = 15.5 mm/0.61 in
y = 10 mm/0.394 in

❺ See application notes for:
Insulation stop, page 199

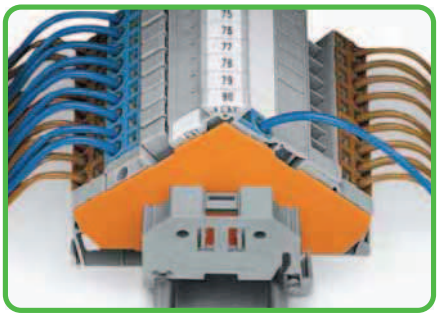

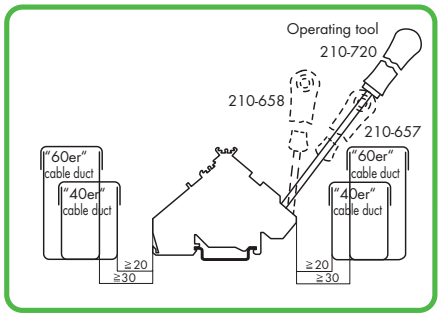

Min. mounting distance – terminal blocks to cable duct



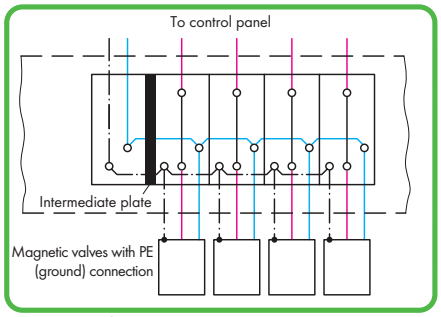

Power supply from control panel side

280 Series Accessories

Appropriate marking system:
WMB (see Section 13)

End and intermediate plate, 1 mm thick, for triple-deck terminal blocks			
	orange	**280-321**	100 (4x25)
	gray	**280-319**	100 (4x25)
Insulation stop, ❺	5 pcs/strip, 0.08 - 0.2 mm² "s" (0.14 mm² "f-st")		
	white	**280-470**	200 (8x25)
Insulation stop, ❺	5 pcs/strip, 0.25 - 0.5 mm²		
	light gray	**280-471**	200 (8x25)
Insulation stop, ❺	5 pcs/strip, 0.75 - 1 mm²		
	dark gray	**280-472**	200 (8x25)
Adjacent jumper, insulated, $I_N = I_N$ terminal block			
	gray	**280-402**	200 (8x25)
Screwless end stop, for DIN 35 rail, 6 mm wide			
	gray	**249-116**	100 (4x25)
Screwless end stop, for DIN 35 rail, 10 mm wide			
	gray	**249-117**	50 (2x25)

Actuator Terminal Blocks with Ground Connection 2.5 mm² for Magnetic Valves, Servomotors
280 Series

0.08 - 2.5 mm²	AWG 28 - 12 *	0.08 - 2.5 mm²	AWG 28 - 12 *	0.08 - 2.5 mm²	AWG 28 - 12 *
400 V/6 kV/3; 20 A ❶ ❷	300 V, 15 A	125 V/5 A ❷	300 V, 6 A	400 V/6 kV/3 ❶	300 V, 10 A
250 V/4 kV/3; 20 A ❶ ❷	300 V, 15 A	250 V/6.3 A ❷	300 V, 15 A	I_N 10 A	300 V, 15 A
Terminal block width 5 mm / 0.197 in		Terminal block width 5 mm / 0.197 in		Terminal block width 5 mm / 0.197 in	
8 - 9 mm / 0.33 in ❸		8 - 9 mm / 0.33 in ❸		8 - 9 mm / 0.33 in ❸	



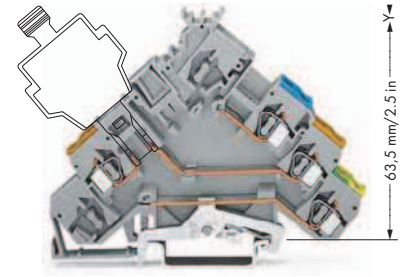

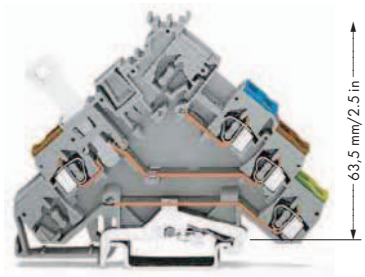

Circuit I Circuit II

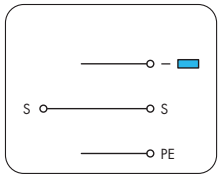

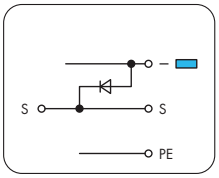

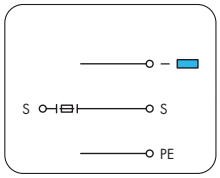

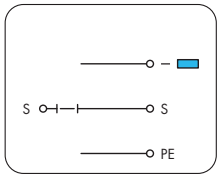

Item No.	Pack. Unit	Item No.	Pack. Unit	Item No.	Pack. Unit
Actuator terminal block with ground connection		**Actuator terminal block with ground connection,** for fuse plugs, for fuse protection of line voltage, without end plate		**Actuator disconnect terminal block with ground connection,** for interruption of line	
Circuit I **280-572**	50	**280-575** ❹	50	**280-576**	50
Actuator terminal block with ground connection, with recovery diode 1N4007					
Circuit II **280-572/281-411**	50				



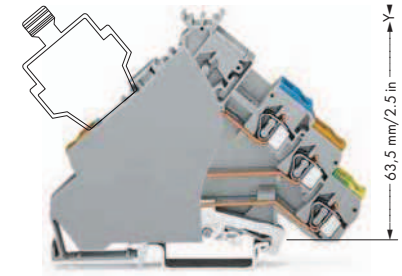



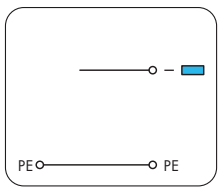

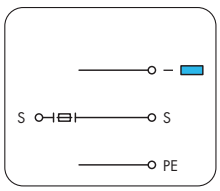

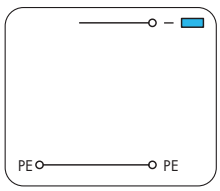

Item No.	Pack. Unit	Item No.	Pack. Unit	Item No.	Pack. Unit
Actuator supply terminal block with ground connection, power supply form actuator side		**Actuator terminal block with ground connection,** for fuse plugs, for fuse protection of line voltage, with end plate		**Actuator supply terminal block with ground connection,** power supply from control panel side, with end plate	
280-593	10	gray **280-575/280-320**	50	**280-578**	20
		gray **280-575/280-323**	50		
				Technical data:	
				400 V/6 kV/3	I_N 20 A

For list of approvals and user guide, see pages 634 to 637.

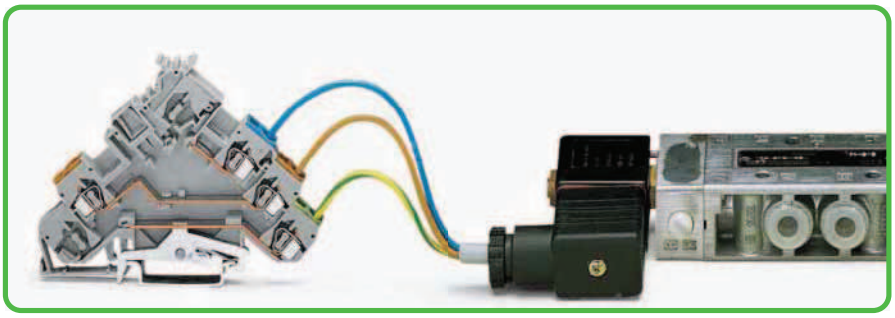

Actuator terminal block paired with a magnetic valve with ground connection

* AWG 12: THHN, THWN

❶ 400 V/250 V = rated voltage
6 kV/4 kV = rated surge voltage
3 = pollution degree
(also see Section 14)

❷ Electrical ratings are given by the fuse plug or empty component plug housing.

❸ Strip length, see packaging or instructions.

❹ For empty component plug housings, see interface modules
x=12 mm/0.472 in
For fuse plugs, see page 230
x = 15.5 mm/0.61 in
y = 10 mm/0.394 in

❺ See application notes for:
Insulation stop, page 199



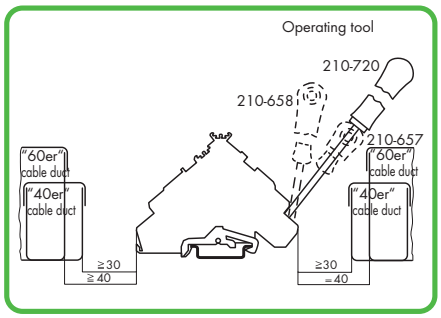

Min. mounting distance – terminal blocks to cable duct

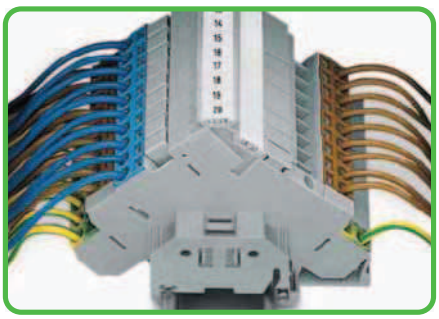

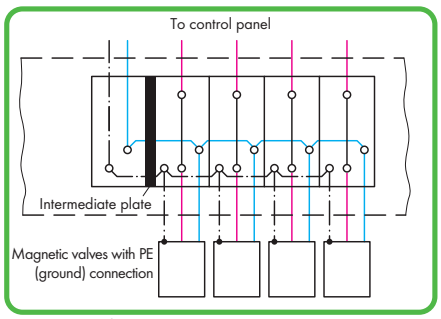

Power supply from control panel side

280 Series Accessories

Appropriate marking system:
WMB (see Section 13)

End and intermediate plate, 1 mm thick, for quadruple-deck terminal blocks			
	orange	**280-323**	100 (4x25)
	gray	**280-320**	100 (4x25)
Insulation stop, ❺ 5 pcs/strip, 0.08 - 0.2 mm² "s" (0.14 mm² "f-st")			
	white	**280-470**	200 (8x25)
Insulation stop, ❺ 5 pcs/strip, 0.25 - 0.5 mm²			
	light gray	**280-471**	200 (8x25)
Insulation stop, ❺ 5 pcs/strip, 0.75 - 1 mm²			
	dark gray	**280-472**	200 (8x25)
Adjacent jumper, insulated, $I_N = I_N$ terminal block			
	gray	**280-402**	200 (8x25)
Screwless end stop, for DIN 35 rail, 6 mm wide			
	gray	**249-116**	100 (4x25)
Screwless end stop, for DIN 35 rail, 10 mm wide			
	gray	**249-117**	50 (2x25)

Actuator LED Terminal Blocks
Actuator LED Terminal Blocks with Ground Connection 2.5 mm²
280 Series

CAGE CLAMP®

0.08 - 2.5 mm²	AWG 28 - 12 *
24 VDC ❶	24 V, 15 A
20 A	300 V, 15 A
Terminal block width 5 mm / 0.197 in	
8 - 9 mm / 0.33 in ❷	

0.08 - 2.5 mm²	AWG 28 - 12 *
24 VDC ❶	24 V, 15 A
20 A	300 V, 15 A
Terminal block width 5 mm / 0.197 in	
8 - 9 mm / 0.33 in ❷	

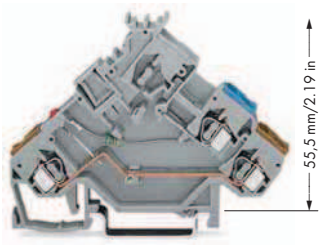



Circuit I Circuit II

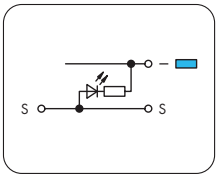

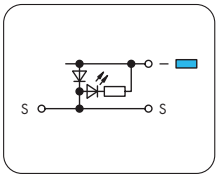

Circuit I Circuit II

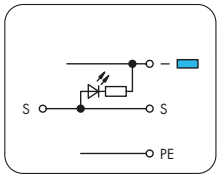

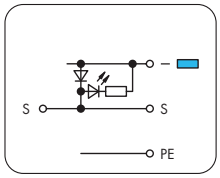

* AWG 12: THHN, THWN

❶ Other voltages upon request.

❷ Strip length, see packaging or instructions.

❸ See application notes for:
Insulation stop, page 199

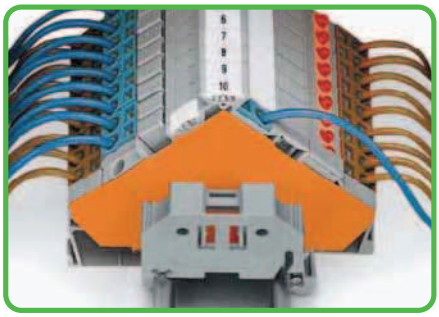

	Item No.	Pack. Unit
Actuator LED terminal block, additional LED, 24 VDC, LED power consumption: 4.8 mA		
Circuit I	**280-562/281-434**	50
Actuator LED terminal block, with recovery diode 1N4007, red LED, 24 VDC, LED power consumption: 4.8 mA		
Circuit II	**280-562/281-420**	50

	Item No.	Pack. Unit
Actuator LED terminal block with ground connection, additional LED, 24 VDC, LED power consumption: 4.8 mA		
Circuit I	**280-572/281-434**	50
Actuator LED terminal block with ground connection, with recovery diode 1N4007, additional LED, 24 VDC, LED power consumption: 4.8 mA		
Circuit II	**280-572/281-420**	50

Item-Specific Accessories

End and intermediate plate, 1 mm thick,



for triple-deck terminal blocks		
orange	**280-321**	100 (4x25)
gray	**280-319**	100 (4x25)

Item-Specific Accessories

End and intermediate plate, 1 mm thick,



for quadruple-deck terminal blocks		
orange	**280-323**	100 (4x25)
gray	**280-320**	100 (4x25)

280 Series Accessories

Appropriate marking system:
WMB (see Section 13)

Insulation stop, ❸



5 pcs/strip,		
0.08 - 0.2 mm² "s" (0.14 mm² "f-st")		
white	**280-470**	200 (8x25)

Adjacent jumper, insulated,



$I_N = I_N$ terminal block		
gray	**280-402**	200 (8x25)

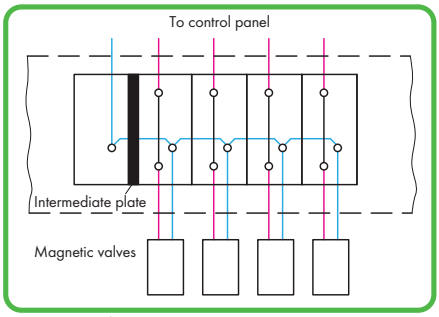

Power supply from control panel side

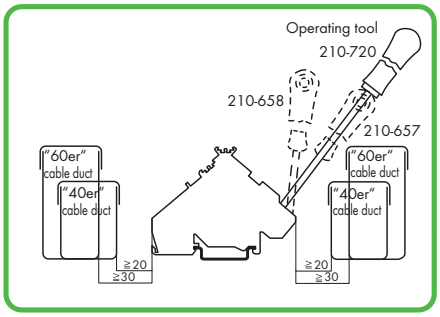

Min. mounting distance – terminal blocks to cable duct

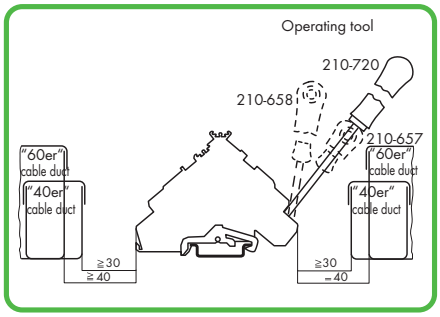

Min. mounting distance – terminal blocks to cable duct

For list of approvals and user guide, see pages 634 to 637.