Karta danych technicznych
Earth conductor clamp

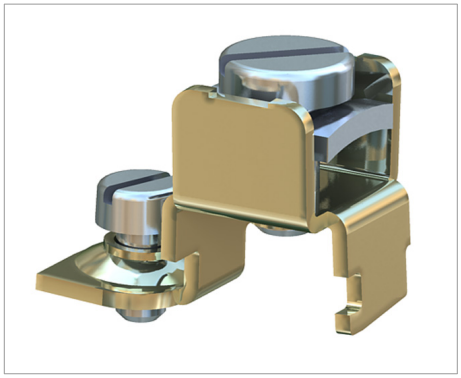

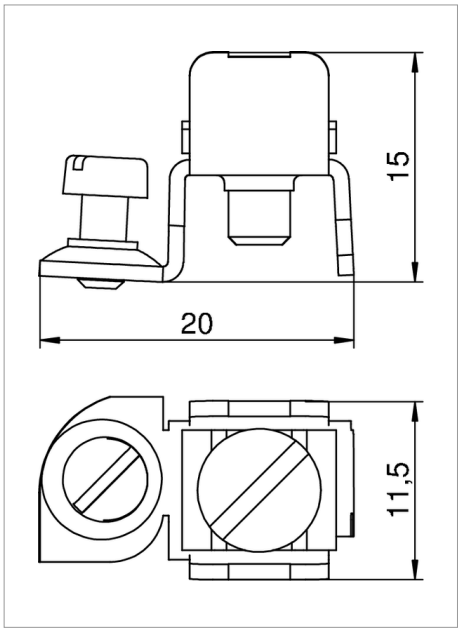

Earth conductor clamp for insertion in duct bases and dividers.

If there is a fault, metallic parts will carry voltage. Tighten the contact screw with at least 1.2 Nm or ensure the contact with mechanical work.

Type	Pack Units	Weight kg/100 pc.	Nr kat.
8AWR	10	0.641	6288704

St Steel G Electrogalvanised price