CAGE CLAMP®

The universal connection for solid, stranded and fine-stranded conductors

Handling:
Open clamping unit,
insert the conductor,
release clamp – done!





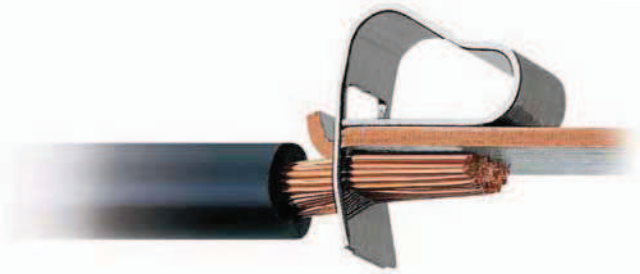

6

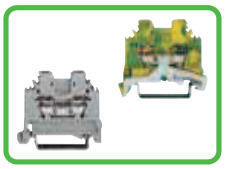

Through and Ground Conductor Terminal Blocks
0.08 mm² to 16 mm² (AWG 28 - 6) — 279 - 283 Series — 306 – 308

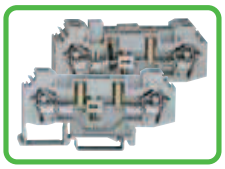

Disconnect Terminal Blocks for Test and Measurement, Ground Conductor Disconnect Terminal Blocks
– 6 mm² / AWG 10 — 282 Series — 310



Fuse Terminal Blocks
– 6 mm² / AWG 10 — 282 Series — 312

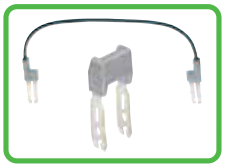

Accessories for Rail-Mounted Terminal Blocks
– Push-In Type Wire Jumpers — 201
– Step-Down Jumpers for Through Terminal Blocks — 309
– Staggered Jumpers — 201
– Test Plug Modules — 194 – 197

Rail-Mounted Terminal Blocks, Side-Entry 279 to 284 Series

Assembly

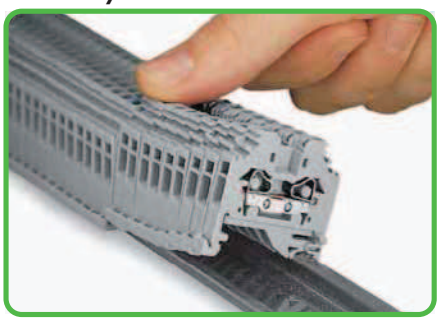

Snapping side-entry rail-mounted terminal blocks onto the carrier rail.

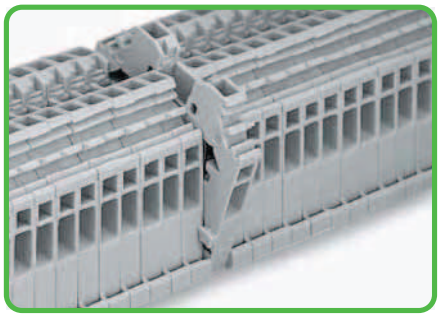

Quick assembly keys prevent reverse mounting.

Removal

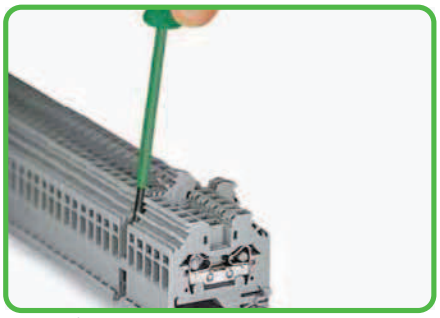

Removal from the carrier rail.

CAGE CLAMP® connection

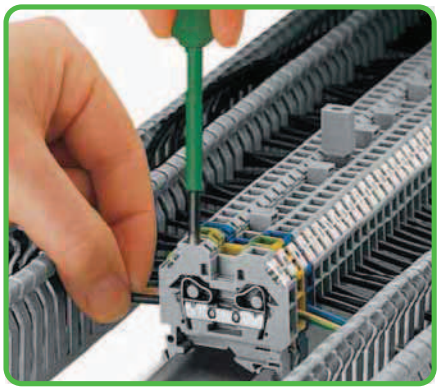

Conductor termination

Testing

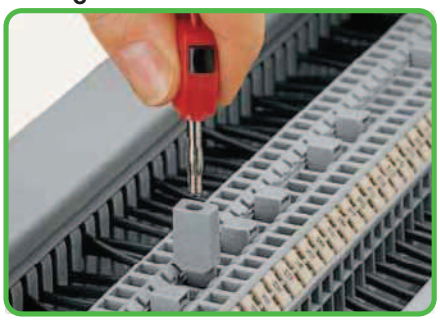

Testing with test plug adapter.

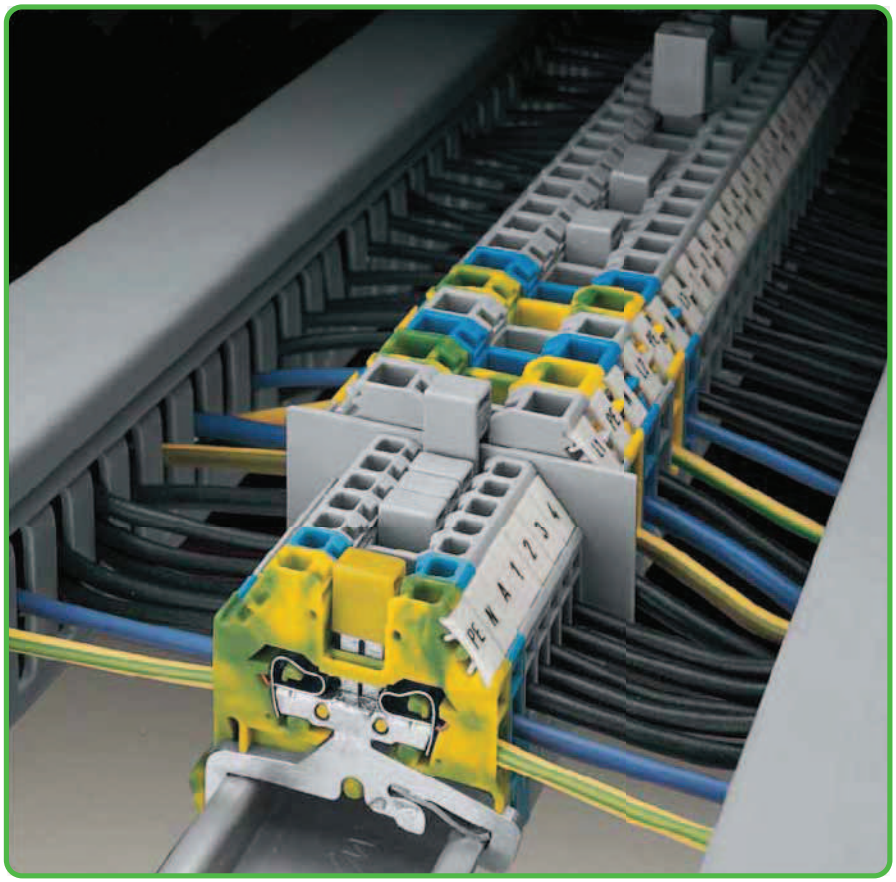

Commoning

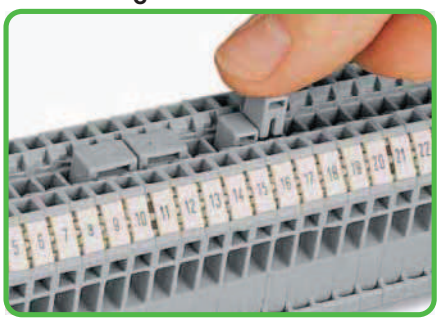

Commoning with adjacent jumpers.

Commoning with step-down jumpers



Commoning side-entry rail-mounted terminal blocks with step-down jumpers.



CAGE CLAMP® clamps the following copper conductors:*

solid



stranded



fine-stranded, also with tinned single strands

* For aluminum conductors, see notes in Section 14.

– Description and Handling –

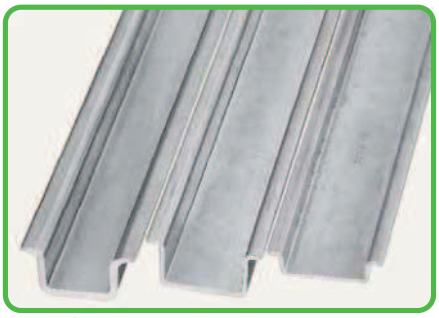

Suitable for all DIN 35 rails.

Fuse terminal blocks

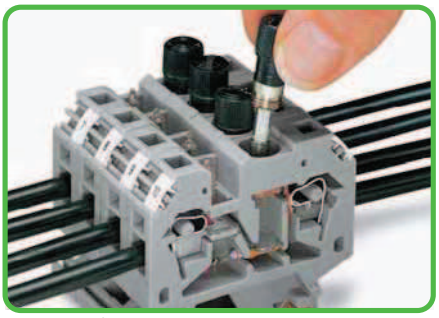

Replacing a fuse.

Disconnect terminal blocks for test and measurement

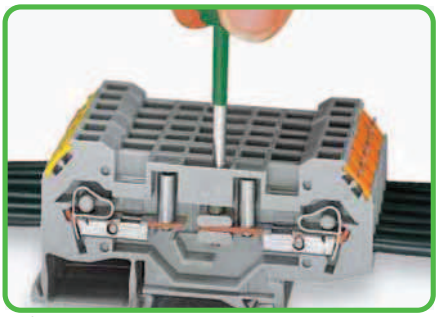

Shifting the disconnect slide link.

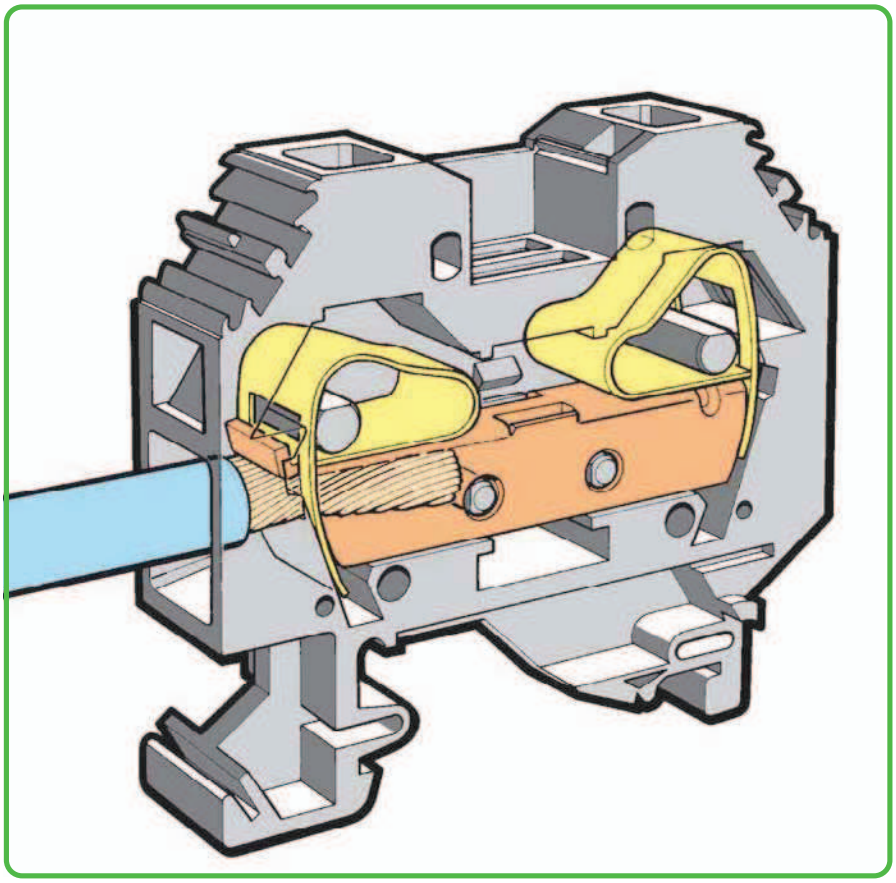

Marking



Marking with WMB Multi marking system.



fine-stranded,
tip-bonded



fine-stranded,
with ferrule ❶
(gastight crimped)



fine-stranded,
with pin terminal
(gastight crimped)

❶ When using ferruled conductors, it is necessary to use a terminal block one size larger than the nominal cross section of the wire.

Through and Ground Conductor Terminal Blocks 1.5 mm² to 6 mm² 279 to 282 Series

0.08 - 1.5 mm²	AWG 28 - 16
800 V/8 kV/3 ❶	600 V, 10 A
I_N 18 A	600 V, 15 A

Terminal block width 4 mm / 0.157 in
8 - 9 mm / 0.33 in ❷

0.08 - 2.5 mm²	AWG 28 - 12 *
800 V/8 kV/3 ❶	600 V, 20 A
I_N 24 A	600 V, 20 A

Terminal block width 5 mm / 0.197 in
8 - 9 mm / 0.33 in ❷

0.08 - 4 mm²	AWG 28 - 12
800 V/8 kV/3 ❶	600 V, 20 A
I_N 32 A	600 V, 25 A

Terminal block width 6 mm / 0.236 in
9 - 10 mm / 0.37 in ❷

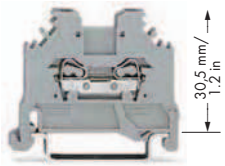

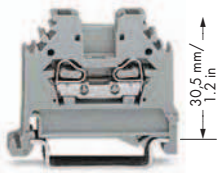

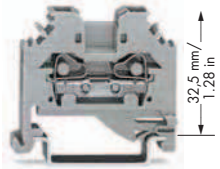

	Item No.	Pack. Unit
2-conductor through terminal block		
gray	**279-101**	100
blue	**279-104** ❸	100

	Item No.	Pack. Unit
2-conductor through terminal block		
gray	**280-101**	100
blue	**280-104** ❸	100
2-conductor ground terminal block		
green-yellow	**280-107**	100

	Item No.	Pack. Unit
2-conductor through terminal block		
gray	**281-101**	100
blue	**281-104** ❸	100
2-conductor ground terminal block		
green-yellow	**281-107**	100

Item-Specific Accessories

	Item No.	Pack. Unit
End and intermediate plate, 2.5 mm thick		
orange	**280-302**	100 (4x25)
gray	**280-301**	100 (4x25)
Separator, oversized, 2 mm thick		
orange	**280-322**	100 (4x25)
gray	**280-332**	100 (4x25)
Adjacent jumper, insulated,		
I_N 15 A		
gray	**279-402**	200 (8x25)
yellow-green	**279-422**	200 (8x25)
Alternate jumper, insulated,		
I_N 15 A		
gray	**279-409**	100 (4x25)
Step-down jumper, insulated,		
❹ I_N 15 A		
gray	**284-414**	50 (2x25)
Intermediate plate,		
1 mm thick		
gray	**281-333**	100 (4x25)
orange	**281-336**	100 (4x25)
Protective warning marker,		
with high-voltage symbol, black,		
for 5 terminal blocks		
yellow	**279-405**	100 (4x25)
Test plug adapter, 8.3 mm wide,		
for terminal blocks 1.5 - 10 mm²,		
for test plug 4 mm Ø		
gray	**209-170**	50 (2x25)
Test plug adapter, 5 mm wide,		
for terminal blocks 1.5 - 4 mm²,		
for 210-137 test plug 2.3 mm Ø		
gray	**280-404**	100 (4x25)

Item-Specific Accessories

	Item No.	Pack. Unit
End and intermediate plate, 2.5 mm thick		
orange	**280-302**	100 (4x25)
gray	**280-301**	100 (4x25)
Separator, oversized, 2 mm thick		
orange	**280-322**	100 (4x25)
gray	**280-332**	100 (4x25)
Adjacent jumper, insulated,		
I_N = I_N terminal block		
gray	**280-402**	200 (8x25)
yellow-green	**280-422**	200 (8x25)
Alternate jumper, insulated,		
I_N = I_N terminal block		
gray	**280-409**	100 (4x25)
Step-down jumper, insulated,		
❹ I_N 15 A		
gray	**284-414**	50 (2x25)
Intermediate plate,		
1 mm thick		
gray	**281-333**	100 (4x25)
orange	**281-336**	100 (4x25)
Protective warning marker,		
with high-voltage symbol, black,		
for 5 terminal blocks		
yellow	**280-405**	100 (4x25)
Test plug adapter, 8.3 mm wide,		
for terminal blocks 1.5 - 10 mm²,		
for test plug 4 mm Ø		
gray	**209-170**	50 (2x25)
Test plug adapter, 5 mm wide,		
for terminal blocks 1.5 - 4 mm²,		
for 210-137 test plug 2.3 mm Ø		
gray	**280-404**	100 (4x25)

Item-Specific Accessories

	Item No.	Pack. Unit
End and intermediate plate, 3 mm thick		
orange	**281-302**	100 (4x25)
gray	**281-301**	100 (4x25)
Separator, oversized, 2 mm thick		
orange	**281-322**	100 (4x25)
gray	**281-332**	100 (4x25)
Adjacent jumper, insulated,		
I_N = I_N terminal block		
gray	**281-402**	200 (8x25)
yellow-green	**281-422**	200 (8x25)
Alternate jumper, insulated,		
I_N = I_N terminal block		
gray	**281-409**	100 (4x25)
Step-down jumper, insulated,		
❹ I_N 15 A		
gray	**284-414**	50 (2x25)
Intermediate plate,		
1 mm thick		
gray	**281-333**	100 (4x25)
orange	**281-336**	100 (4x25)
Step-down jumper, insulated,		
I_N 30 A		
gray	**284-413**	50 (2x25)
Step-down jumper, insulated,		
I_N 32 A		
gray	**283-414**	50 (2x25)
Protective warning marker,		
with high-voltage symbol, black,		
for 5 terminal blocks		
yellow	**281-405**	100 (4x25)
Test plug adapter, 8.3 mm wide,		
for terminal blocks 1.5 - 10 mm²,		
for test plug 4 mm Ø		
gray	**209-170**	50 (2x25)

For list of approvals and user guide, see pages 634 to 637.

0.2 - 6 mm²	AWG 24 - 10
800 V/8 kV/3 ❶	600 V, 30 A
I_N 41 A	600 V, 10 A

Terminal block width 8 mm / 0.315 in
12 - 13 mm / 0.49 in ❷

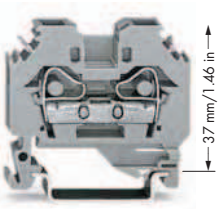

Carrier rail	Item No.	Curre [A]	Acc. to mm²/AWG Cu
DIN 35 x 7.5 (steel)			
slotted	210-112	76	16/6
unslotted	210-113	76	16/6
DIN 35 x 15 (steel)			
1.5 mm thick	210-114	125	35/2
2.3 mm thick	210-118	125	35/2
DIN 35 x 7.5 (Al)			
unslotted	210-196	76	16/6
DIN 35 x 15 (Cu)			
2.3 mm thick	210-198	309	150/6/0
Current applies to rails of 1 m/3'3" length			

If required to use standard carrier rails as ground conductor busbars, please refer to insert space between the **maximum current capacities** listed above.
According to EN 60947-7-2 (VDE 0611, part 3), steel carrier rails shall not be used for PEN applications.

* AWG 12: THHN, THWN

❶ 800 V = rated voltage
8 kV = rated surge voltage
3 = pollution degree
(also see Section 14)

❷ Strip length, see packaging or instructions.

❸ Suitable for Ex i applications

❹ See application notes for:
Step-down jumper, page 309
Test plug module, page 197

	Item No.	Pack. Unit
2-conductor through terminal block		
gray	**282-101**	50
blue	**282-104** ❸	50
2-conductor ground terminal block		
green-yellow	**282-107**	50

Item-Specific Accessories

End and intermediate plate, 4 mm thick			
	orange	**282-302**	100 (4x25)
	gray	**282-301**	100 (4x25)
Separator, oversized, 2 mm thick			
	orange	**282-322**	100 (4x25)
	gray	**282-332**	100 (4x25)
Adjacent jumper, insulated,			
	I_N 41 A		
	gray	**282-402**	100 (4x25)
	yellow-green	**282-422**	100 (4x25)
Alternate jumper, insulated,			
	I_N 41 A		
	gray	**282-409**	100 (4x25)
Step-down jumper, insulated,			
❹	I_N 30 A		
	gray	**284-413**	50 (2x25)
Cover plate,			
	1 mm thick		
	gray	**284-333**	100 (4x25)
	orange	**284-343**	100 (4x25)
Protective warning marker,			
	with high-voltage symbol, black,		
	for 5 terminal blocks		
	yellow	**282-405**	100 (4x25)
Test plug adapter, 8.3 mm wide,			
	for terminal blocks 1.5 - 10 mm²,		
	for test plug 4 mm Ø		
	gray	**209-170**	50 (2x25)
B-type test plug module,			
❹	can be snapped together,		
	8 mm wide		
	gray	**709-310**	100 (4x25)
B-type spacer module,			
	can be snapped together,		
	8 mm wide		
	gray	**709-311**	100 (4x25)

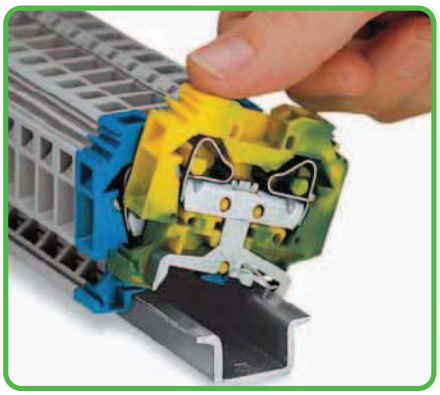

Snapping a terminal block onto the carrier rail.
Ground conductor terminal blocks snap onto the rail in the same way as through terminal blocks, but automatically make a direct electrical connection to the rail.
Sliding on the rail is not then possible.

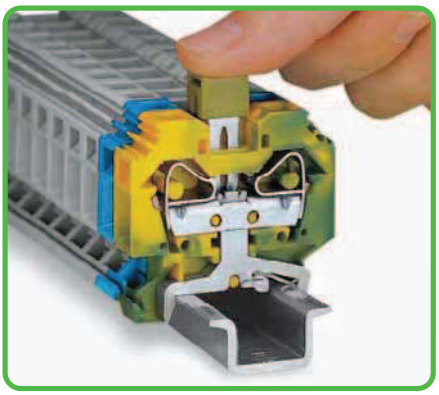

Push jumper down firmly until fully inserted.
Commoning ground conductor terminal blocks with through terminal blocks is possible in one direction only (via rear side of terminal block) using adjacent jumpers. In addition to the required marking of these blocks, use yellow-green adjacent jumpers.

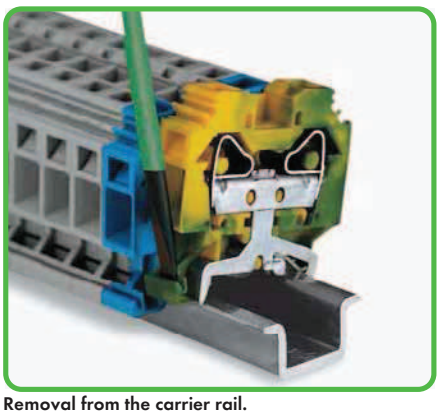

Removal from the carrier rail.
When mounting on the rail, ensure that open sides of terminal blocks face in the same direction.
Both mounting feet and removal slots are on the same side for all terminal blocks, making it possible to visually ensure blocks are facing in same direction.

Through and Ground Conductor Terminal Blocks
10 mm² and 16 mm²
284 and 283 Series

CAGE CLAMP®

0.2 - 10 mm²	AWG 24 - 8
800 V/8 kV/3 ❶	600 V, 50 A
I_N 57 A	600 V, 65 A

Terminal block width 10 mm / 0.394 in
12 - 13 mm / 0.49 in ❷

0.2 - 16 mm²	AWG 24 - 6
800 V/8 kV/3 ❶	600 V, 65 A
I_N 76 A	600 V, 90 A

Terminal block width 12 mm / 0.472 in
16 - 17 mm / 0.65 in ❷

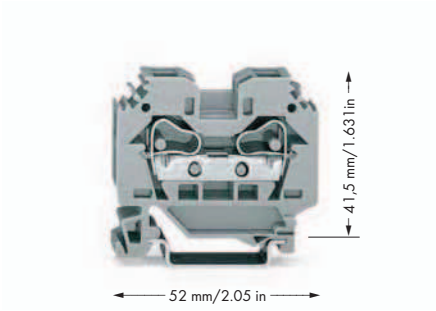

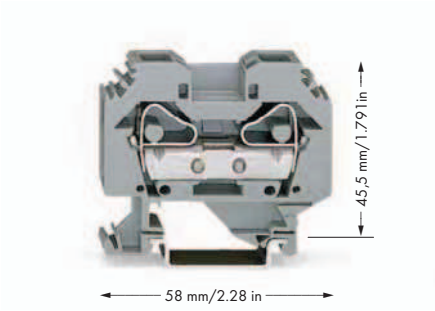

❶ 800 V = rated voltage
8 kV = rated surge voltage
3 = pollution degree
(also see Section 14)

❷ Strip length, see packaging or instructions.

❸ See application notes for:
Step-down jumper, page 309
Test plug module, page 197

	Item No.	Pack. Unit
2-conductor through terminal block		
gray	**284-101**	50
blue	**284-104**	50
2-conductor ground terminal block		
green-yellow	**284-107**	50

	Item No.	Pack. Unit
2-conductor through terminal block		
gray	**283-101**	50
blue	**283-104**	50
2-conductor ground terminal block		
green-yellow	**283-107**	50

Item-Specific Accessories

End and intermediate plate, 2.5 mm thick			
	orange	**284-302**	100 (4x25)
	gray	**284-301**	100 (4x25)
Separator, oversized, 2 mm thick			
	orange	**284-322**	100 (4x25)
	gray	**284-332**	100 (4x25)
Adjacent jumper, insulated,			
	I_N 57 A		
	gray	**284-402**	100 (4x25)
	yellow-green	**284-422**	100 (4x25)
Alternate jumper, insulated,			
	I_N 57 A		
	gray	**284-409**	50 (2x25)
Step-down jumper, insulated,			
❸	I_N 30 A		
	gray	**284-413**	50 (2x25)
Cover plate,			
	1 mm thick		
	gray	**284-333**	100 (4x25)
	orange	**284-343**	100 (4x25)
Protective warning marker,			
	with high-voltage symbol, black, for 5 terminal blocks		
	yellow	**284-405**	50 (2x25)
Test plug adapter, 8.3 mm wide,			
	for terminal blocks 1.5 - 10 mm², for test plug 4 mm Ø		
	gray	**209-170**	50 (2x25)
B-type test plug module,			
❸	can be snapped together, 8 mm wide		
	gray	**709-310**	100 (4x25)
B-type spacer plate,			
	can be snapped together, 2 mm wide		
	gray	**709-312**	100 (4x25)

Item-Specific Accessories

End and intermediate plate, 4 mm thick			
	orange	**283-302**	50 (2x25)
	gray	**283-301**	50 (2x25)
Separator, oversized, 2 mm thick			
	orange	**283-322**	50 (2x25)
	gray	**283-332**	50 (2x25)
Adjacent jumper, insulated,			
	I_N 70 A		
	gray	**283-402**	50 (2x25)
	yellow-green	**283-422**	50 (2x25)
Alternate jumper, insulated,			
	I_N 76 A		
	gray	**283-409**	50 (2x25)
Step-down jumper, insulated,			
❸	I_N 32 A		
	gray	**283-414**	50 (2x25)
Cover plate,			
	1 mm thick		
	gray	**283-333**	100 (4x25)
	orange	**283-335**	100 (4x25)
Protective warning marker,			
	with high-voltage symbol, black, for 5 terminal blocks		
	yellow	**283-405**	50 (2x25)
Test plug adapter, 11.6 mm wide,			
	for 1.5 - 16 mm² terminal blocks, for test plug 4 mm Ø		
	gray	**283-404**	25



Step-down jumpers may common terminal blocks of different sizes, without losing a conductor clamping point. This can be beneficial on long conductor runs where voltage drop can be a problem. A large conductor can be easily connected to smaller conductors at the distribution point. Step-down jumpers are simply pushed down for full insertion, similar to adjacent jumpers.
Commoning may be made in either direction using the special thin end plate to cover the open side. Further terminal blocks of the smaller cross section may be commoned using standard adjacent jumpers.
In this case, pay attention that:

1. **The total current flowing does not exceed the rating of the step-down jumper.**
2. The standard or special thin cover plate is installed on the open side of the larger block.

For list of approvals and user guide, see pages 634 to 637.

Step-Down Jumpers for Side-Entry Through Terminal Blocks *

Step-down jumper	Step-down jumper





* Terminal blocks for side-entry cannot be commoned with terminal blocks for front-entry.
For commoning terminal blocks, front-entry via step-down jumpers, see pages 178 and 179

❶ Commoning from 10 mm² (284-101) to 2.5 mm² (280-101) or 1.5 mm² (279-101) terminal blocks via terminal block rear side is not possible (see example: terminal block A to 11).

	Item No.	Pack. Unit
Step-down jumper, insulated,		
from 10/6 mm² to 4/2.5/1.5 mm²,		
I_N 15 A		
gray	**284-414**	50 (2x25)
Step-down jumper, insulated,		
from 10/6 mm² to 6/4 mm²,		
I_N 30 A		
gray	**284-413**	50 (2x25)

	Item No.	Pack. Unit
Step-down jumper, insulated,		
from 16 mm² to 4 mm²,		
I_N 32 A		
gray	**283-414**	50 (2x25)

Item-Specific Accessories

		Item No.	Pack. Unit
Cover plate,			
1 mm thick			
gray		**284-333**	100 (4x25)
orange		**284-343**	100 (4x25)
Intermediate plate,			
1 mm thick			
gray		**281-333**	100 (4x25)
orange		**281-336**	100 (4x25)

Item-Specific Accessories

		Item No.	Pack. Unit
Cover plate,			
1 mm thick			
gray		**283-333**	100 (4x25)
orange		**283-335**	100 (4x25)

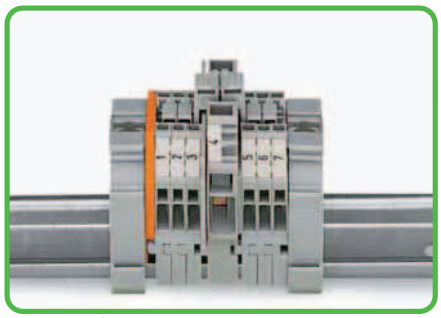

Commoning from 6 mm²/AWG 10 (282 Series) to 1.5 mm²/AWG 16 (279 Series) rail-mount terminal blocks.

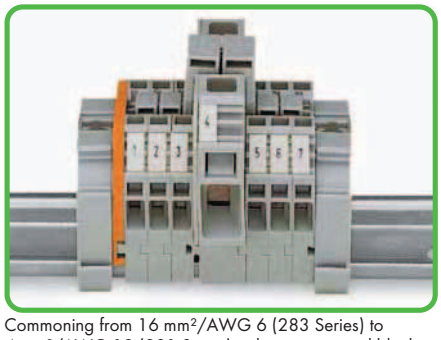

Commoning from 16 mm²/AWG 6 (283 Series) to 4 mm²/AWG 12 (281 Series) rail-mount terminal blocks.

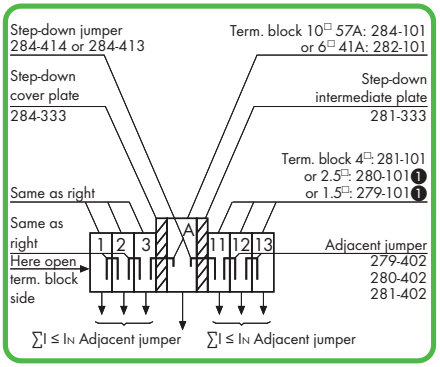

Example of assembly: "Commoning from 10/6 mm² (AWG 8/10) to 4/2.5/1.5 mm² (AWG 12/14/16) rail-mount terminal blocks with 284-414 step-down jumper."

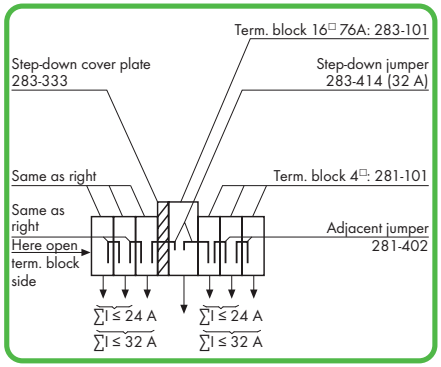

Example of assembly: "Commoning from 16 mm² (AWG 6) to 4 mm² (AWG 12) rail-mount terminal blocks with 283-414 step-down jumper."

Disconnect Terminal Blocks for Test and Measurement, Ground Conductor
Disconnect Terminal Blocks 6 mm²
282 Series

0.2 - 6 mm²	AWG 24 - 10	
400 V/6 kV/3 ❶	300 V, 30 A	
I_N 41 A	300 V, 40 A	
Terminal block width 8 mm / 0.315 in		
12 - 13 mm / 0.49 in ❷		

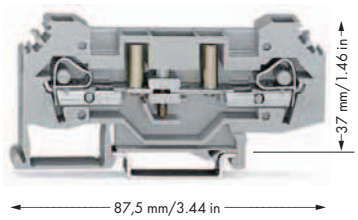

0.2 - 6 mm²	AWG 24 - 10	
400 V/6 kV/3 ❶	300 V, 30 A	
I_N 41 A	300 V, 40 A	
Terminal block width 8 mm / 0.315 in		
12 - 13 mm / 0.49 in ❷		

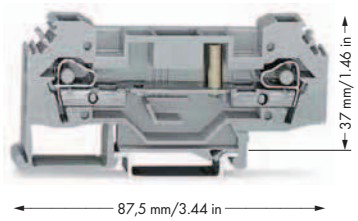

0.2 - 6 mm²	AWG 24 - 10	
400 V/6 kV/3 ❶	300 V, 30 A	
I_N 41 A	300 V, 40 A	
Terminal block width 8 mm / 0.315 in		
12 - 13 mm / 0.49 in ❷		

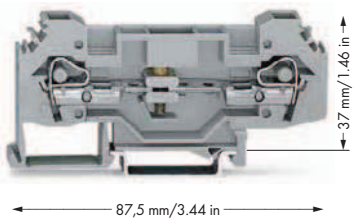

	Item No.	Pack. Unit
Disconnect terminal block for test and measurement,		
with test sockets 4 mm Ø		
gray	**282-131**	25

	Item No.	Pack. Unit
Through terminal block		
gray	**282-133**	25

	Item No.	Pack. Unit
Disconnect terminal block for test and measurement,		
without test sockets		
gray	**282-135**	25

Item-Specific Accessories

Alternate jumper, insulated,



I_N 41 A

gray	**282-409**	100 (4x25)

Lock-out, snap-in type,



prevents reclosing of slide link

orange	**282-137**	100 (4x25)

Item-Specific Accessories

Alternate jumper, insulated,



I_N 41 A

gray	**282-409**	100 (4x25)

Item-Specific Accessories

Alternate jumper, insulated,



I_N 41 A

gray	**282-409**	100 (4x25)

Lock-out, snap-in type,



prevents reclosing of slide link

orange	**282-137**	100 (4x25)

282 Series Accessories

Appropriate marking system:
WMB (see Section 13)

End and intermediate plate, 4 mm thick



orange	**282-315**	50 (2x25)
gray	**282-314**	50 (2x25)

Adjacent jumper, insulated,



I_N 41 A

gray	**282-402**	100 (4x25)

Protective warning marker,



with high-voltage symbol, black,
for 5 terminal blocks

yellow	**282-405**	100 (4x25)

Test plug adapter, 8.3 mm wide,



for terminal blocks 1.5 - 10 mm²,
for test plug 4 mm Ø

gray	**209-170**	50 (2x25)

Screwless end stop,



for DIN 35 rail,
6 mm wide

gray	**249-116**	100 (4x25)

Screwless end stop,



for DIN 35 rail,
10 mm wide

gray	**249-117**	50 (2x25)

❸ **B-type test plug module,**



can be snapped together,
8 mm wide

gray	**709-310**	100 (4x25)

B-type spacer module,



can be snapped together,
8 mm wide

gray	**709-311**	100 (4x25)

For list of approvals and user guide, see pages 634 to 637.

0.2 - 6 mm² | **AWG 24 - 10**

Terminal block width 16 mm / 0.63 in
12 - 13 mm / 0.49 in ❷

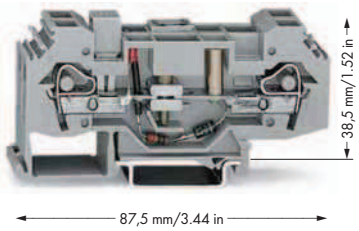

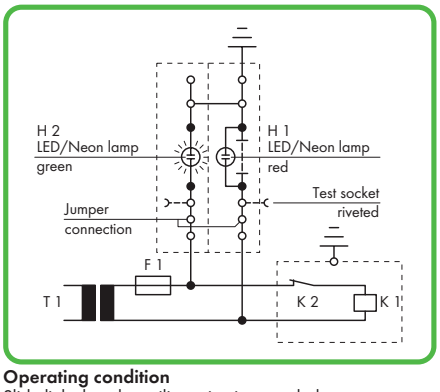

Operating condition
Slide link closed, auxiliary circuit grounded, green lamp illuminates.

❶ 400 V = rated voltage
6 kV = rated surge voltage
3 = pollution degree
(also see Section 14)

❷ Strip length, see packaging or instructions.

❸ See application notes for:
Test plug module, page 197

	Item No.	Pack. Unit
Ground conductor disconnect terminal block, gray		
24 V	**282-140**	12
48 V	**282-141**	12
120 V	**282-138**	12
230 V	**282-139**	12

Item-Specific Accessories

Lock-out, snap-in type,
prevents reclosing of slide link
orange **282-137** 100 (4x25)

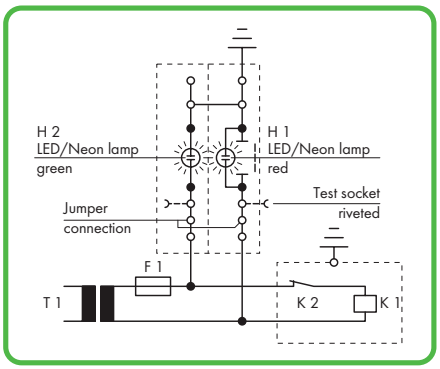

Test condition – no grounding
Slide link open, auxiliary circuit not grounded.

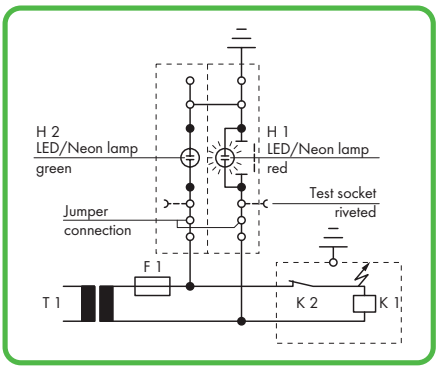

Test condition – grounding
Slide link open, auxiliary circuit not grounded, red lamp illuminates.

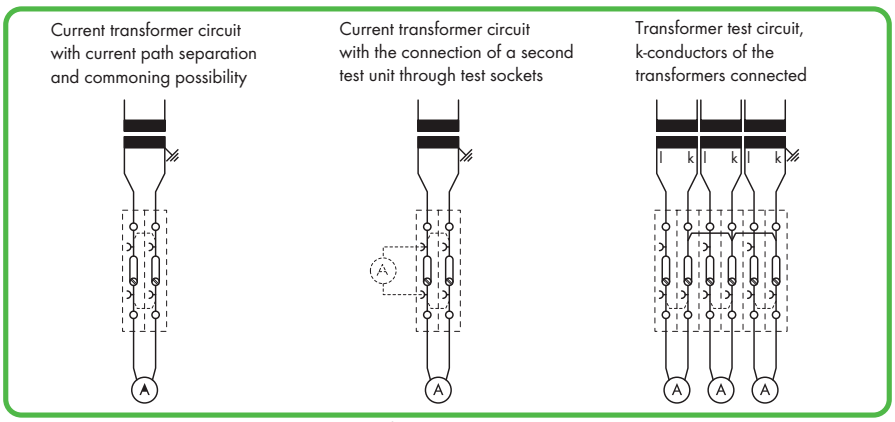

IEC 60204/DIN VDE 0113 "Electrical equipment of industrial machines, part 1: General requirements" 9.4.3.1:
Ground faults on control circuits shall not cause unintentional starting, hazardous movements, or prevent stopping of the machine.
In order to fulfill this requirement, bonding to the protective bonding circuit shall be provided in accordance with 8.2 and the devices shall be connected as described in 9.1.4. Control circuits fed from a transformer and not connected to the protective bonding circuit shall be provided with an insulation monitoring device (e.g., residual current device) which either indicates an ground fault or interrupts the circuit automatically after an ground fault.
In the case of electronic circuits, the connection of one side of the control circuit to the protective bonding circuit in accordance with 9.1.4 can prevent unintentional operation. When this does not help, or if due to other reasons electronic circuits cannot be connected to the protective bonding circuit, other measures shall be taken to achieve the same level of safety.
Where the control circuit is directly connected between the phase conductors of the supply or between a phase conductor and a neutral conductor, which is either not grounded or grounded through a high impedance, multipole control switches which interrupt all live conductors shall be used for start or stop of those machine functions, which can cause a hazardous condition or damage to the machine or to the work in progress, in the event of unintentional starting or failure to stop.

Fuse Terminal Blocks 6 mm²
282 Series

0.2 - 6 mm²	AWG 24 - 10
500 V/6 kV/3 ❶	600 V, 10 A
I_N 10 A	250 V, 10 A

Terminal block width 13 mm / 0.512 in
12 - 13 mm / 0.49 in ❷

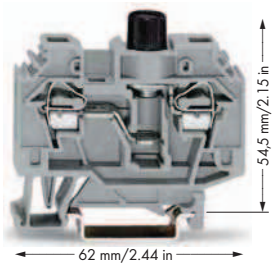

0.2 - 6 mm²	AWG 24 - 10
500 V/6 kV/3 ❶	
I_N 10 A	250 V, 10 A

Terminal block width 13 mm / 0.512 in
12 - 13 mm / 0.49 in ❷

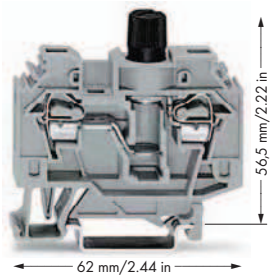

0.2 - 6 mm²	AWG 24 - 10
500 V/6 kV/3 ❶	600 V, 10 A
I_N 10 A	250 V, 10 A

Terminal block width 13 mm / 0.512 in
12 - 13 mm / 0.49 in ❷

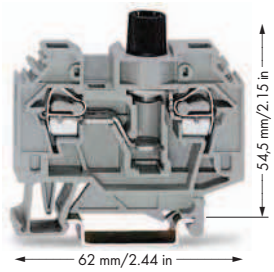

	Item No.	Pack. Unit
2-conductor fuse terminal block, without indicator, for miniature metric fuses 5 x 20 mm		
gray	**282-122**	40

	Item No.	Pack. Unit
2-conductor fuse terminal block, without indicator, for miniature metric fuses ¼" x 1"		
gray	**282-120**	40
2-conductor fuse terminal block, without indicator, for miniature metric fuses ¼" x 1¼"		
gray	**282-128**	40

	Item No.	Pack. Unit
2-conductor fuse terminal block, with indicator, for miniature metric fuses		
gray	**282-126**	40

Item-Specific Accessories

Miniature metric fuse, 5 x 20 mm,
without indicator,
6.3 A/250 V, medium/slow
282-451 200 (20x10)

Item-Specific Accessories

Miniature metric fuse, ¼" x 1",
without indicator,
10 A/240 V, to BS 1362
282-458 200 (20x10)

Miniature metric fuse, ¼" x 1¼",
without indicator,
10 A/250 V, medium/slow
282-457 200 (2x100)

Miniature metric fuse, ¼" x 1¼",
without indicator,
10 A/500 V, very fast acting
282-454 200 (20x10)

Item-Specific Accessories

Miniature metric fuse, 5 x 25 mm/0.197 x 0.975 in,
with indicator,
6.3 A, medium/slow
282-452 200 (20x10)

Miniature metric fuse, 5 x 25 mm/0.197 x 0.975 in,
with indicator,
10 A, fast acting
282-453 200 (20x10)

Accessories for Fuse Terminal Blocks

Appropriate marking system:
WMB (see Section 13)

End and intermediate plate, 4 mm thick
orange **282-312** 50 (2x25)
gray **282-311** 50 (2x25)

Adjacent jumper, insulated,
I_N 41 A
gray **282-402** 100 (4x25)

Protective warning marker,
with high-voltage symbol, black,
for 5 terminal blocks
yellow **282-405** 100 (4x25)

Test plug adapter, 8.3 mm wide,
for terminal blocks 1.5 - 10 mm²,
for test plug 4 mm Ø
gray **209-170** 50 (2x25)

Test plug adapter, 6 mm wide,
with CAGE CLAMP®,
for 0.08 - 2.5 mm²
I_N 24 A **281-407** 100 (4x25)

Plunger,
for 281, 282, 283 and 284 Series rail-mounted terminal blocks for side-entry
210-141 1

For list of approvals and user guide, see pages 634 to 637.