Fuse Disconnect Terminal Blocks with Pivoting Fuse Holder, for Miniature Metric Fuses, 281 Series

Blown fuse indication



Blown fuse indication by LED or neon lamp.

Fuse replacement



Before replacing the fuse, pivot the fuse holder in the locked open position.

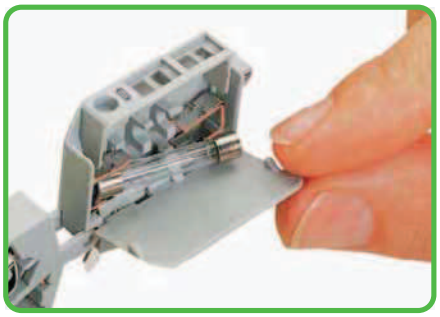

One end of the fuse is automatically ejected from the holder when opening the cover.

CAGE CLAMP® connection

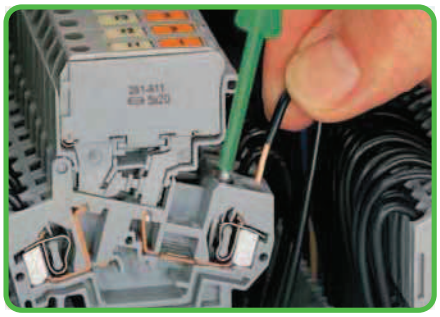

Conductor termination

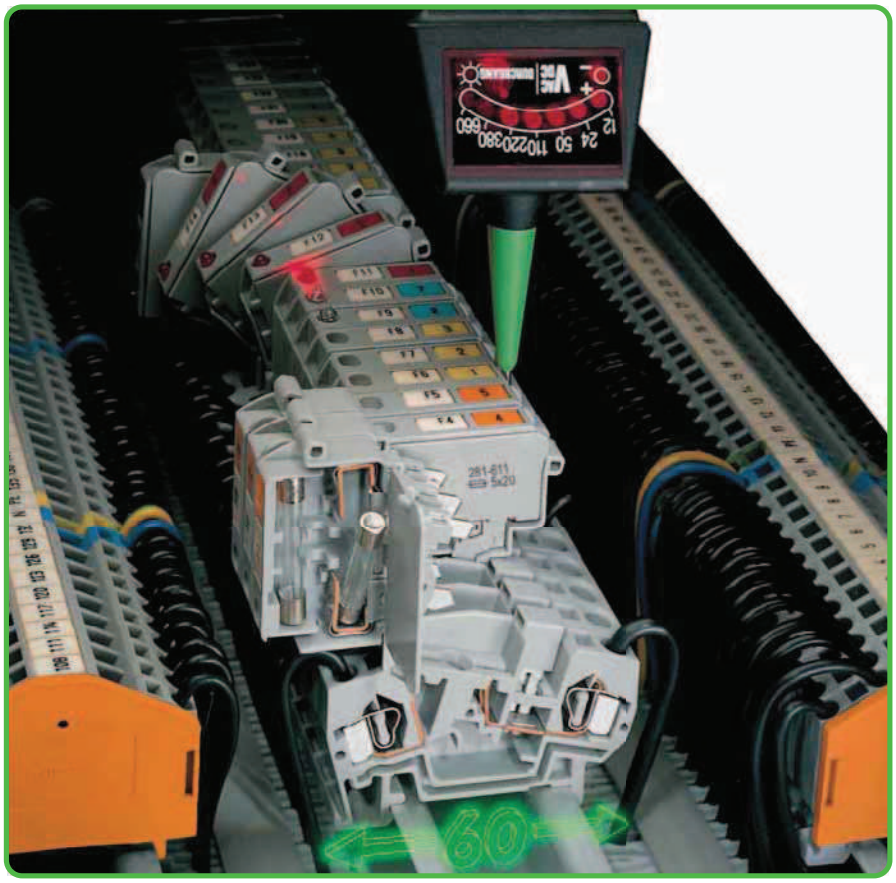

Commoning

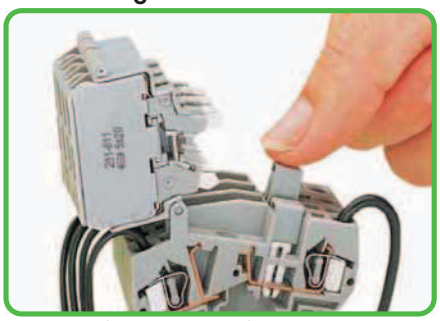

Distribution of current to several fuse-protected circuits via insulated touchproof jumpers.

Testing

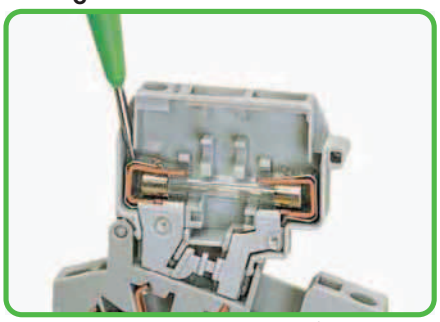

Voltage test, either at input or output with fuse holder in closed position (live).

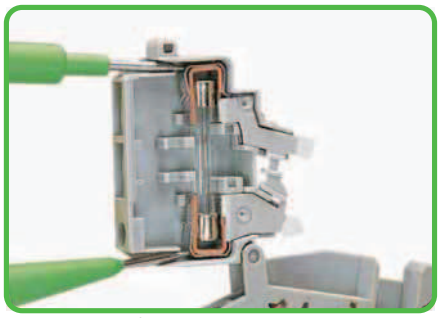

Through test with fuse holder in open position (no voltage).

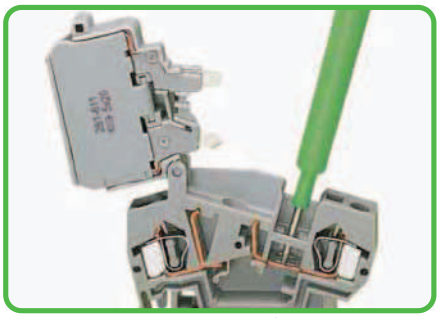

Voltage test at input in the test slot of the current bar.



CAGE CLAMP® clamps the following copper conductors:*

solid



stranded



fine-stranded, also with tinned single strands

* For aluminum conductors, see notes in Section 14.

Fuse replacement (continued)



The fuse can be easily removed by hand.

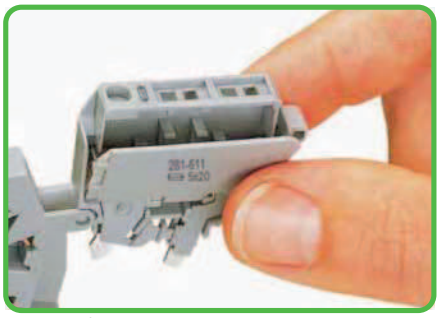

Insert new fuse snap the cover closed.

Spare fuse

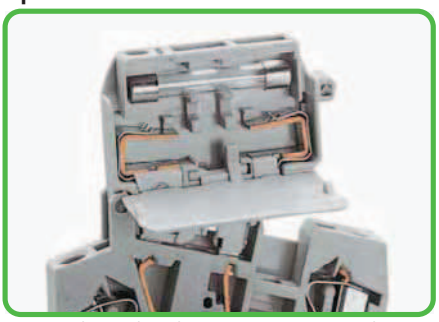

Storage of spare fuse (fuse holder without blown fuse indication).

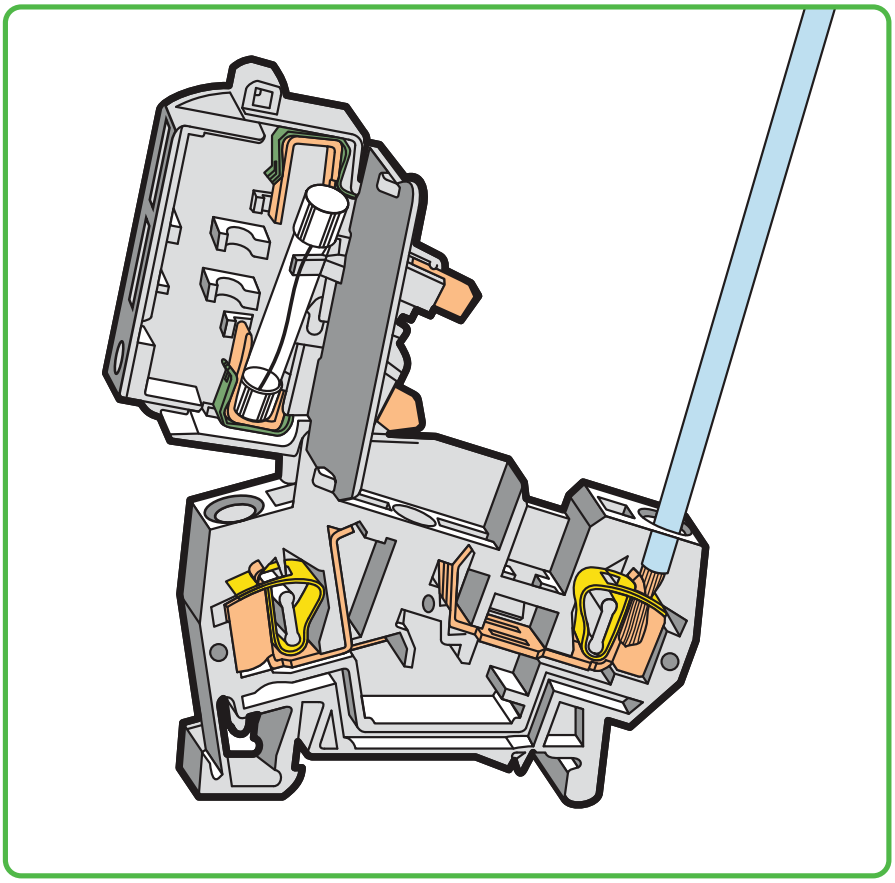

Touchproof protection



"Touchproof" protection in all positions of the fuse holder.

Locked position

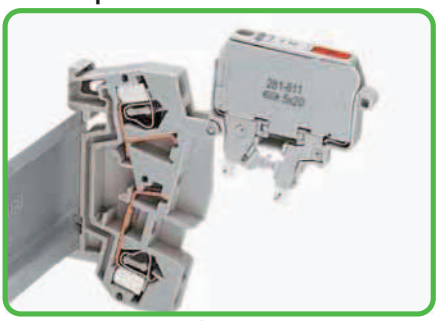

Fuse holder will remain safely locked open in vertical assemblies.

Testing (continued)



Testing voltage at the output via separate test slot.

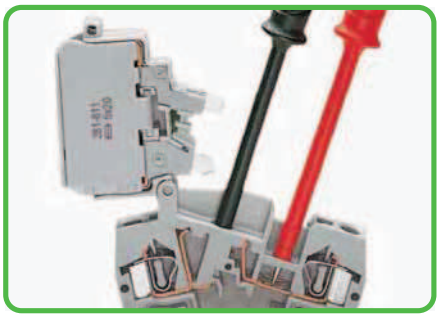

Current measuring between jumper slot and separate test slot.

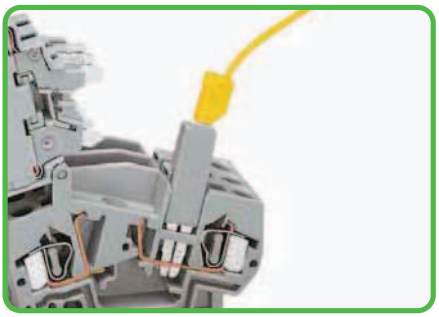

Voltage testing at input via 280-404 test plug adapter (shown) or 281-407 test plug.



fine-stranded, tip-bonded



fine-stranded, with ferrule ❶ (gastight crimped)



fine-stranded, with pin terminal (gastight crimped)

❶ When using ferrules, the max. conductor cross section accommodated is one size smaller than max. rating of terminal block.

Fuse Disconnect Terminal Blocks with Pivoting Fuse Holder 4 mm² for Miniature Metric Fuses 5 x 20 mm, 5 x 25 mm and 5 x 30 mm
281 Series

0.08 - 4 mm²	AWG 28 - 12	
800 V/8 kV/3 ❶ ❷	600 V, 10 A	
I_N 10 A (6.3 A)	600 V, 10 A	
Terminal block width 8 mm / 0.315 in		
9 - 10 mm / 0.37 in ❸		

0.08 - 4 mm²	AWG 28 - 12	
800 V/8 kV/3 ❶ ❷	30 V, 10 A	
I_N 10 A (6.3 A)	230 V, 10 A	
Terminal block width 8 mm / 0.315 in		
9 - 10 mm / 0.37 in ❸		

0.08 - 4 mm²	AWG 28 - 12	
800 V/8 kV/3 ❶ ❷	220 V, 10 A	
I_N 10 A (6.3 A)	230 V, 10 A	
Terminal block width 8 mm / 0.315 in		
9 - 10 mm / 0.37 in ❸		

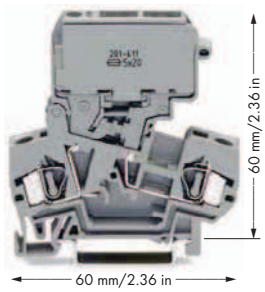

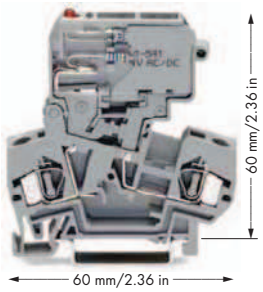

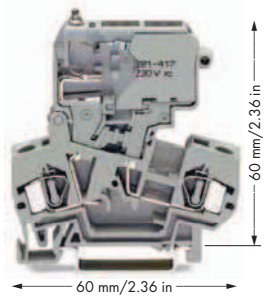

	Item No.	Pack. Unit
Fuse disconnect terminal block with pivoting fuse holder,		
for miniature metric fuses 5 x 20 mm,		
without blown fuse indication,		
Nominal voltage and current are given by the fuse.		
○ gray	**281-611**	50
● orange	**281-616**	50
Fuse disconnect terminal block with pivoting fuse holder,		
for miniature metric fuses 5 x 25 mm,		
without blown fuse indication,		
Nominal voltage and current are given by the fuse.		
○ gray	**281-612**	50
Fuse disconnect terminal block with pivoting fuse holder,		
for miniature metric fuses 5 x 30 mm,		
without blown fuse indication,		
Nominal voltage and current are given by the fuse.		
○ gray	**281-622**	50
Miniature metric fuse on request		

	Item No.	Pack. Unit
Fuse disconnect terminal block with pivoting fuse holder,		
for miniature metric fuses 5 x 20 mm,		
with blown fuse indication by LED, gray		
Nominal voltage and current are given by the LED or fuse.		
Leakage current in case of blown fuse: LED 6mA		
○ 15 - 30 V	**281-611/281-541**	50
○ 30 - 65 V	**281-611/281-542**	50
Fuse disconnect terminal block with pivoting fuse holder,		
for miniature metric fuses 5 x 25 mm,		
with blown fuse indication by LED, gray		
Nominal voltage and current are given by the LED or fuse.		
Leakage current in case of blown fuse: LED 6mA		
○ 15 - 30 V	**281-612/281-541**	50
○ 30 - 65 V	**281-612/281-542**	50
Fuse disconnect terminal block with pivoting fuse holder,		
for miniature metric fuses 5 x 30 mm,		
with blown fuse indication by LED, gray		
Nominal voltage and current are given by the LED or fuse.		
Leakage current in case of blown fuse: LED 6mA		
○ 15 - 30 V	**281-622/281-541**	50
○ 30 - 65 V	**281-622/281-542**	50
Miniature metric fuse on request		

	Item No.	Pack. Unit
Fuse disconnect terminal block with pivoting fuse holder,		
for miniature metric fuses 5 x 20 mm,		
with blown fuse indication by neon lamp, gray		
Nominal voltage and current are given by the LED or fuse.		
Leakage current in case of blown fuse: Neon lamp < 0.4mA		
○ 230 V	**281-611/281-417**	50
○ 120 V	**281-611/281-418**	50
Fuse disconnect terminal block with pivoting fuse holder,		
for miniature metric fuses 5 x 25 mm,		
with blown fuse indication by neon lamp, gray		
Nominal voltage and current are given by the LED or fuse.		
Leakage current in case of blown fuse: Neon lamp < 0.4mA		
○ 230 V	**281-612/281-417**	50
○ 120 V	**281-612/281-418**	50
Fuse disconnect terminal block with pivoting fuse holder,		
for miniature metric fuses 5 x 30 mm,		
with blown fuse indication by neon lamp, gray		
Nominal voltage and current are given by the LED or fuse.		
Leakage current in case of blown fuse: Neon lamp < 0.4mA		
○ 230 V	**281-622/281-417**	50
○ 120 V	**281-622/281-418**	50
Miniature metric fuse on request		

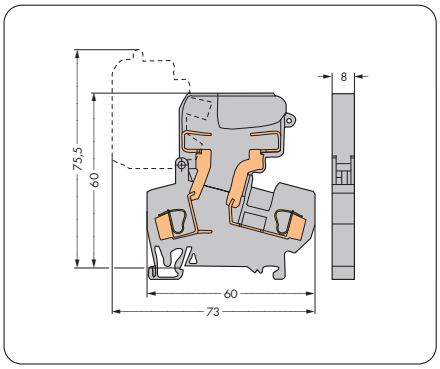

Dimensions in mm

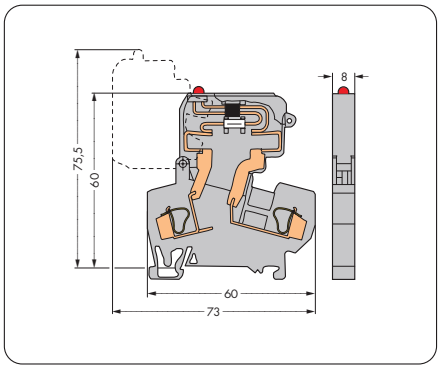

Dimensions in mm

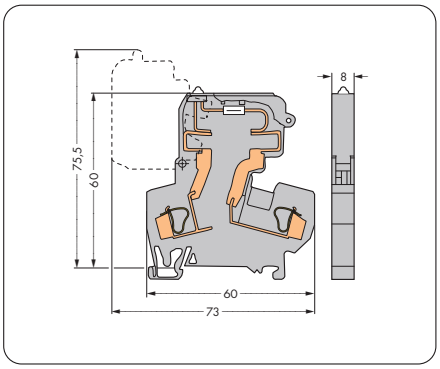

Dimensions in mm

For list of approvals and user guide, see pages 634 to 637.

0.08 - 4 mm²	AWG 28 - 12
800 V/8 kV/3 ❶	600 V, 16 A
I_N 16 A	600 V, 10 A

Terminal block width 8 mm / 0.315 in
9 - 10 mm / 0.37 in ❸

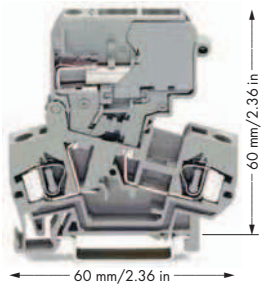

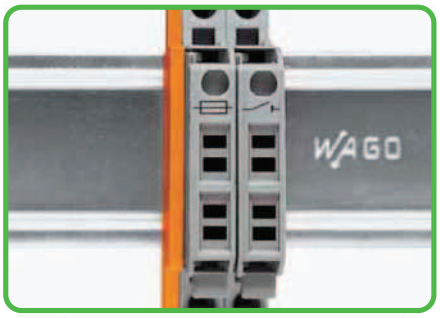

Fuse or fuse disconnect terminal blocks with a width of 8 mm/0.315 in can be assembled adjacently. At the end of an assembly, if there is **no** adjacent Fuse or fuse disconnect terminal block, an end or intermediate plate must be used.

❶ 800 V = rated voltage
8 kV = rated surge voltage
3 = pollution degree
(also see Section 14)

❷ Electrical ratings are given by the fuse (also see pages 234 – 235).

❸ Strip length, see packaging or instructions.

	Item No.	Pack. Unit
Disconnect terminal block with movable disconnect slide link		
gray	**281-624**	50
orange	**281-672**	50

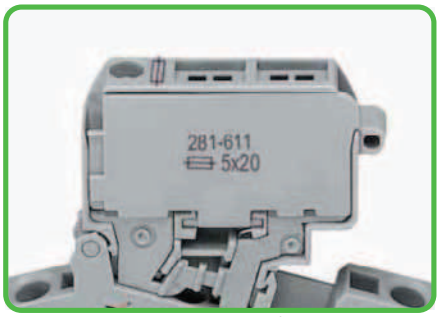

Fuse holders are printed with correct fuse size.

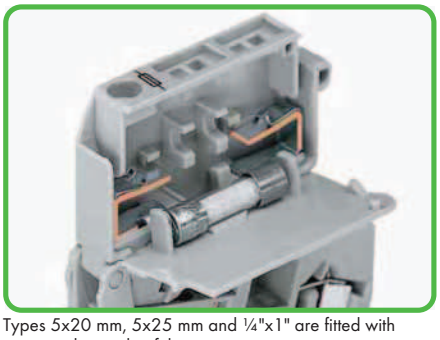

Types 5x20 mm, 5x25 mm and ¼"x1" are fitted with stops on the inside of the cover.

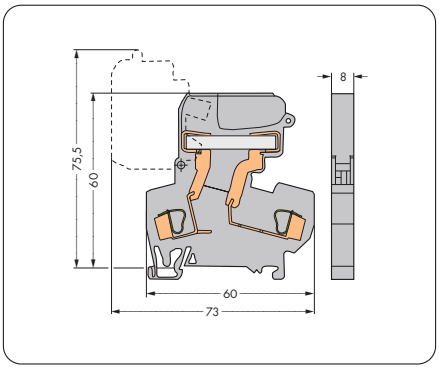

Dimensions in mm

281 Series Accessories

Appropriate marking system:
WMB (see Section 13)

End and intermediate plate, 2.5 mm thick			
	orange	**281-309**	100 (4x25)
	gray	**281-311**	100 (4x25)
Adjacent jumper, insulated,			
	I_N = I_N terminal block		
	gray	**281-402**	200 (8x25)
Collective carrier for adjacent jumpers			
	gray	**209-100**	50 (2x25)
Test plug adapter, 5 mm wide,			
	for terminal blocks 1.5 - 4 mm²,		
	for 210-137 test plug 2.3 mm Ø		
	gray	**280-404**	100 (4x25)
Test plug,			
	with 500 mm cable,		
	2.3 mm Ø		
	yellow	**210-137**	50
Test plug adapter, 6 mm wide,			
	with CAGE CLAMP®,		
	for 0.08 - 2.5 mm²		
	I_N 24 A	**281-407**	100 (4x25)
Push-in type wire jumper,			
	insulated,		
	I_N 9 A,		
	wire size 0.75 mm²		
	L = 60 mm	**249-125**	10
	L = 110 mm	**249-126**	10
	L = 250 mm	**249-127**	10
Interlocking link,			
	mechanically locks multiple links,		
	1 m/3'3" long		
	transparent	**210-254**	1
Screwless end stop,			
	for DIN 35 rail,		
	6 mm wide		
	gray	**249-116**	100 (4x25)
Screwless end stop,			
	for DIN 35 rail,		
	10 mm wide		
	gray	**249-117**	50 (2x25)

Fuse Disconnect Terminal Blocks with Pivoting Fuse Holder 4 mm² for Miniature Metric Fuses ¼" x 1" mm and ¼" x 1¼" mm
281 Series

0.08 - 4 mm²	AWG 28 - 12	
800 V/8 kV/3 ❶ ❷	600 V, 10 A	
I_N 10 A (6.3 A)	600 V, 10 A	
Terminal block width 10 mm / 0.394 in		
9 - 10 mm / 0.37 in ❸		

0.08 - 4 mm²	AWG 28 - 12	
800 V/8 kV/3 ❶ ❷	30 V, 10 A	
I_N 10 A (6.3 A)	30 V, 10 A	
Terminal block width 10 mm / 0.394 in		
9 - 10 mm / 0.37 in ❸		

0.08 - 4 mm²	AWG 28 - 12	
800 V/8 kV/3 ❶ ❷	220 V, 10 A	
I_N 10 A (6.3 A)	100 V, 10 A	
Terminal block width 10 mm / 0.394 in		
9 - 10 mm / 0.37 in ❸		

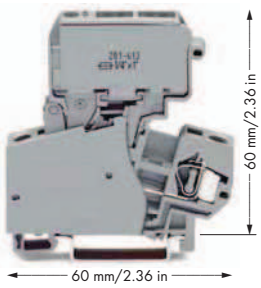

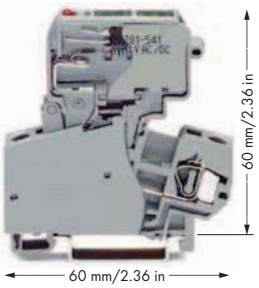

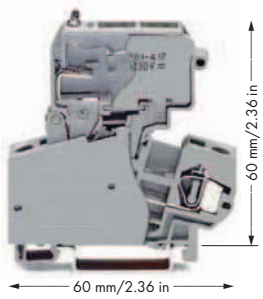

	Item No.	Pack. Unit
Fuse disconnect terminal block with pivoting fuse holder,		
for miniature fuses ¼" x 1",		
without blown fuse indication,		
Nominal voltage and current are given by the fuse.		
◯ gray	**281-613**	50
Fuse disconnect terminal block with pivoting fuse holder,		
for miniature fuses ¼" x 1¼",		
without blown fuse indication,		
Nominal voltage and current are given by the fuse.		
◯ gray	**281-623**	50
Miniature metric fuse on request		

	Item No.	Pack. Unit
Fuse disconnect terminal block with pivoting fuse holder,		
for miniature fuses ¼" x 1",		
with blown fuse indication by LED, gray		
Nominal voltage and current are given by the LED or fuse.		
Leakage current in case of blown fuse: LED 6mA		
◯ 15 - 30 V	**281-613/281-541**	50
◯ 30 - 65 V	**281-613/281-542**	50
Fuse disconnect terminal block with pivoting fuse holder,		
for miniature fuses ¼" x 1¼",		
with blown fuse indication by LED, gray		
Nominal voltage and current are given by the LED or fuse.		
Leakage current in case of blown fuse: LED 6mA		
◯ 15 - 30 V	**281-623/281-541**	50
◯ 30 - 65 V	**281-623/281-542**	50
Miniature metric fuse on request		

	Item No.	Pack. Unit
Fuse disconnect terminal block with pivoting fuse holder,		
for miniature fuses ¼" x 1",		
with blown fuse indication by neon lamp, gray		
Nominal voltage and current are given by the LED or fuse.		
Leakage current in case of blown fuse: Neon lamp < 0.4mA		
◯ 230 V	**281-613/281-417**	50
◯ 120 V	**281-613/281-418**	50
Fuse disconnect terminal block with pivoting fuse holder,		
for miniature fuses ¼" x 1¼",		
with blown fuse indication by neon lamp, gray		
Nominal voltage and current are given by the LED or fuse.		
Leakage current in case of blown fuse: Neon lamp < 0.4mA		
◯ 230 V	**281-623/281-417**	50
◯ 120 V	**281-623/281-418**	50
Miniature metric fuse on request		

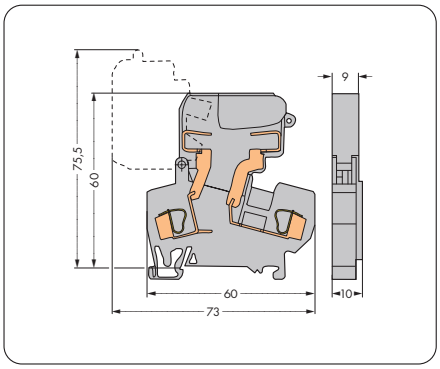

Dimensions in mm

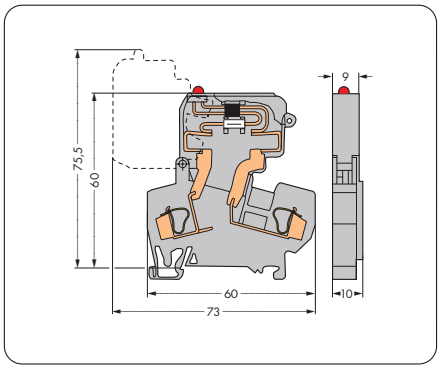

Dimensions in mm

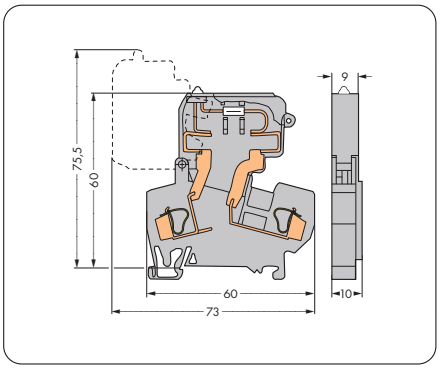

Dimensions in mm

For list of approvals and user guide, see pages 634 to 637.