Accessories and Examples of Circuit Configuration LED Terminal Blocks, Series 279 and 280

0.08 – 2.5 mm² | **AWG 28 – 14**
DC 24 V
I_F 25 mA max.
Terminal block width 5 mm / 0.197 in
8 – 9 mm / 0.33 in
* KEMA KEUR CCA KEMA KEUR BV LR NV

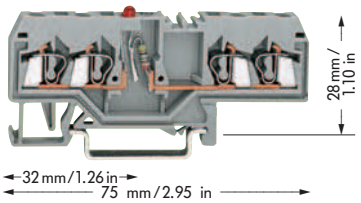

	Item No.	Pack. unit pcs
4-conductor LED terminal blocks		
with red LED, DC 24 V		
Circuit I, grey	**280-658/281-434**	100
Circuit II, grey	**280-658/281-413**	100
Examples of circuit configuration see page 7.61		
Through terminal block with the same shape		
grey	**280-633**	page 2.11
Appropriate marking system **WMB/WSB** (see section 14) Marker width 5 mm/0.197 in		
End and intermediate plate, 2.5 mm/0.098 in thick		
orange	**280-315**	100 (4 x 25)
grey	**280-314**	100 (4 x 25)

Accessories Series 279

	Item No.	Pack. unit pcs
Comb type jumper bar, insulated,	see page 2.44	
$I_N = I_N$ of terminal block		
2-way	**279-482**	200 (8 x 25)
3-way	**279-483**	200 (8 x 25)
10-way	**279-490**	50 (2 x 25)
Alternate comb type jumper bar, insulated,		
$I_N = I_N$ of terminal block		
2-way	**279-492**	200 (8 x 25)
Operating tool, insulated		
2-way	**279-432**	1
3-way	**279-433**	1
10-way	**279-440**	1

Accessories Series 280

	Item No.	Pack. unit pcs
Comb type jumper bar, insulated,	see page 2.44	
$I_N = I_N$ of terminal block		
2-way	**280-482**	200 (8 x 25)
3-way	**280-483**	200 (8 x 25)
10-way	**280-490**	50 (2 x 25)
Alternate comb type jumper bar, insulated,		
$I_N = I_N$ of terminal block		
2-way	**280-492**	200 (8 x 25)
Operating tool, insulated		
2-way	**280-432**	1
3-way	**280-433**	1
10-way	**280-440**	1
Wire commoning chain, insulated, 50 connections, 8 A		
black	**210-103**	1
blue	**210-123**	1

3-conductor LED terminal block

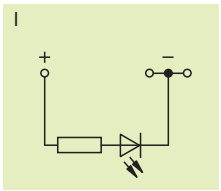

	Item No.	Pack. unit pcs
Circuit I	**279-674/281-434**	100
Circuit II	**279-674/281-413**	100

4-conductor LED terminal block

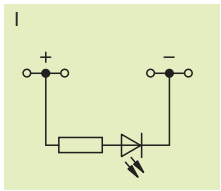

	Item No.	Pack. unit pcs
Circuit I	**279-809/281-434**	100
Circuit II	**279-809/281-413**	100
Circuit I	**279-624/281-434**	100
Circuit II	**279-624/281-413**	100
Circuit I	**280-809/281-434**	100
Circuit II	**280-809/281-413**	100
Circuit I	**280-658/281-434**	100
Circuit II	**280-658/281-413**	100
Circuit I	**280-624/281-434**	100
Circuit II	**280-624/281-413**	100

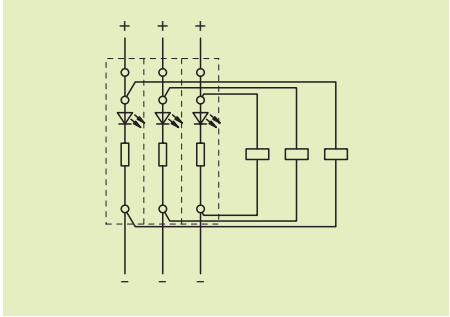

Voltage indication

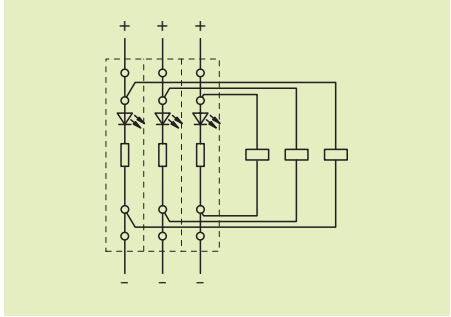

Voltage indication

Double Deck Diode Terminal Blocks
Double Deck LED Terminal Blocks 2.5 mm² / AWG 14 and 4 mm² / AWG 12
Series 280 and 281

0.08 – 2.5 mm² | AWG 28 – 14
U_N 250 V; U_{RM} 1000 V
1 N 4007 – 0.5 A continuous current
Terminal block width 5 mm / 0.197 in
8 – 9 mm / 0.33 in
* KEMA CCA KEMA BV LR NV

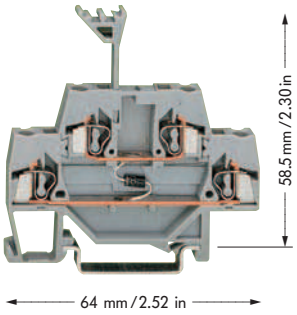

	Item No.	Pack. unit pcs
Double deck diode terminal blocks with diode 1 N 4007		
Circuit I, grey	**280-940/281-410**	50
Circuit II, grey	**280-940/281-411**	50
Through terminal blocks with the same shape and accessories		
grey	**280-519**	page 2.30

0.08 – 2.5 mm² | AWG 28 – 14
U_N 250 V; U_{RM} 1000 V
1 N 4007 – 0.5 A continuous current
Terminal block width 5 mm / 0.197 in
8 – 9 mm / 0.33 in
* KEMA CCA KEMA BV LR NV

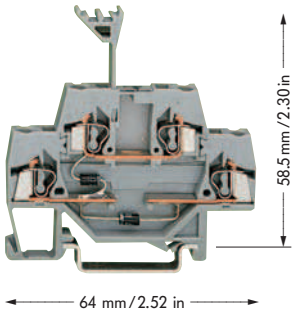

	Item No.	Pack. unit pcs
Double deck diode terminal blocks with 2 diodes 1 N 4007		
Circuit I, grey	**280-941/281-492**	50
Circuit II, grey	**280-941/281-491**	50
Through terminal blocks with the same shape and accessories		
grey	**280-519**	page 2.30

0.08 – 2.5 mm² | AWG 28 – 14
U_N 250 V; U_{RM} 1000 V
1 N 4007 – 0.5 A continuous current
Terminal block width 5 mm / 0.197 in
8 – 9 mm / 0.33 in

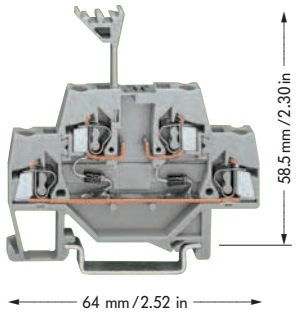

	Item No.	Pack. unit pcs
Double deck diode terminal blocks with 2 diodes 1 N 4007		
Circuit I, grey	**280-942/281-487**	50
Circuit II, grey	**280-942/281-488**	50
Through terminal blocks with the same shape and accessories		
grey	**280-519**	page 2.30

0.08 – 4 mm² | AWG 28 – 12
U_N 250 V; U_{RM} 1000 V
1 N 4007 – 0.5 A continuous current
Terminal block width 6 mm / 0.236 in
9 – 10 mm / 0.37 in
* KEMA CCA KEMA BV LR NV

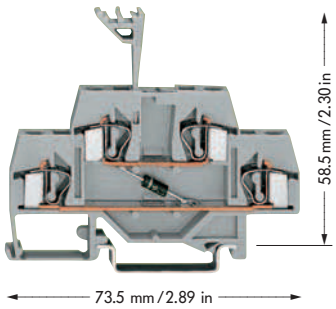

	Item No.	Pack. unit pcs
Double deck diode terminal blocks with diode 1 N 4007		
Circuit I, grey	**281-633/281-410**	50
Circuit II, grey	**281-633/281-411**	50
Through terminal blocks with the same shape and accessories		
grey	**281-619**	page 2.33

0.08 – 4 mm² | AWG 28 – 12
U_N 250 V; U_{RM} 1000 V
1 N 4007 – 0.5 A continuous current
Terminal block width 6 mm / 0.236 in
9 – 10 mm / 0.37 in
* KEMA CCA KEMA BV LR NV

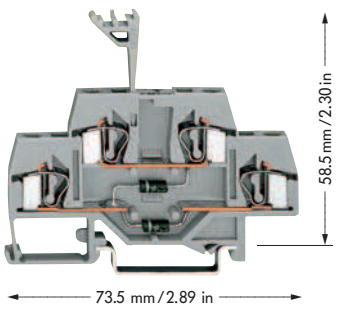

	Item No.	Pack. unit pcs
Double deck diode terminal blocks with 2 diodes 1 N 4007		
Circuit I, grey	**281-635/281-492**	50
Circuit II, grey	**281-635/281-491**	50
Through terminal blocks with the same shape and accessories		
grey	**281-619**	page 2.33

0.08 – 4 mm² | AWG 28 – 12
U_N 250 V; U_{RM} 1000 V
1 N 4007 – 0.5 A continuous current
Terminal block width 6 mm / 0.236 in
9 – 10 mm / 0.37 in

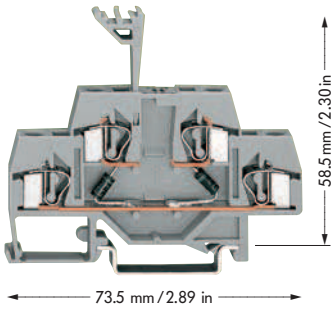

	Item No.	Pack. unit pcs
Double deck diode terminal blocks with 2 diodes 1 N 4007		
Circuit I, grey	**281-636/281-487**	50
Circuit II, grey	**281-636/281-488**	50
Through terminal blocks with the same shape and accessories		
grey	**281-619**	page 2.33

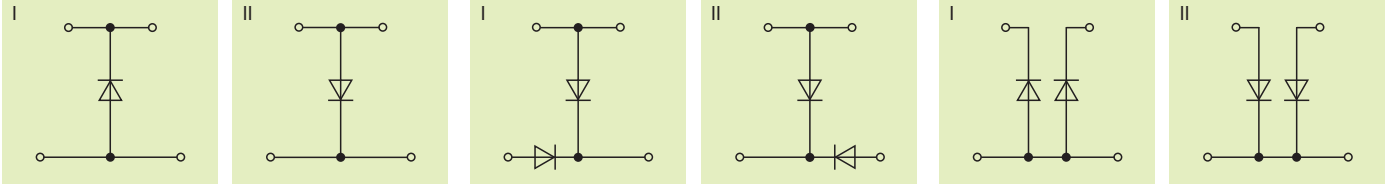

*For further approvals with corresponding ratings see section 15.

0.08 – 2.5 mm² | AWG 28 – 14
U_N 250 V; U_{RM} 1000 V
1 N 4007 – 0.5 A continuous current
Terminal block width 5 mm / 0.197 in
8 – 9 mm / 0.33 in

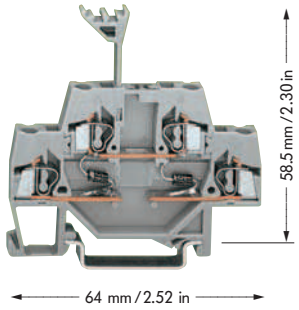

	Item No.	Pack. unit pcs
Double deck diode terminal blocks		
with 2 diodes 1 N 4007		
Circuit I, grey	**280-941/281-489**	50
Circuit II, grey	**280-941/281-490**	50
Through terminal blocks with the same shape and accessories		
grey	**280-519**	page 2.30

0.08 – 2.5 mm² | AWG 28 – 14
DC 24 V
I_F 25 mA max.
Terminal block width 5 mm / 0.197 in
8 – 9 mm / 0.33 in
* KEMA CCA KEMA BV LR NV

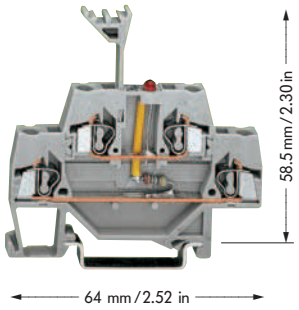

	Item No.	Pack. unit pcs
Double deck LED terminal blocks		
with red LED, DC 24 V		
Circuit I, grey	**280-943/281-434**	50
Circuit II, grey	**280-943/281-413**	50
Through terminal blocks with the same shape and accessories		
grey	**280-519**	page 2.30

0.08 – 4 mm² | AWG 28 – 12
U_N 250 V; U_{RM} 1000 V
1 N 4007 – 0.5 A continuous current
Terminal block width 6 mm / 0.236 in
9 – 10 mm / 0.37 in
* KEMA CCA KEMA BV LR NV

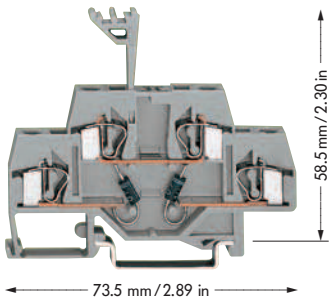

	Item No.	Pack. unit pcs
Double deck diode terminal blocks		
with 2 diodes 1 N 4007		
Circuit I, grey	**281-635/281-489**	50
Circuit II, grey	**281-635/281-490**	50
Through terminal blocks with the same shape and accessories		
grey	**281-619**	page 2.33

0.08 – 4 mm² | AWG 28 – 12
DC 24 V
I_F 25 mA max.
Terminal block width 6 mm / 0.236 in
9 – 10 mm / 0.37 in
* KEMA CCA KEMA BV LR NV

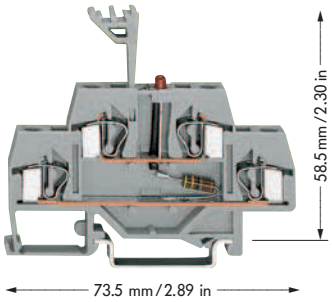

	Item No.	Pack. unit pcs
Double deck LED terminal blocks		
with red LED, DC 24 V		
Circuit I, grey	**281-634/281-434**	50
Circuit II, grey	**281-634/281-413**	50
Through terminal blocks with the same shape and accessories		
grey	**281-619**	page 2.33

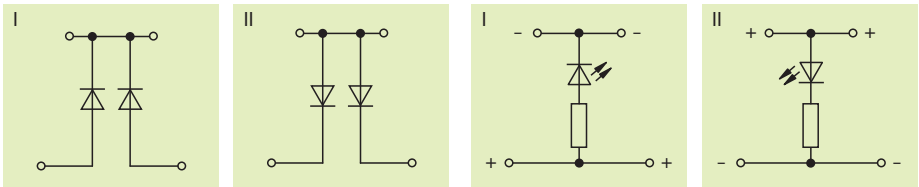

Examples of circuit configuration

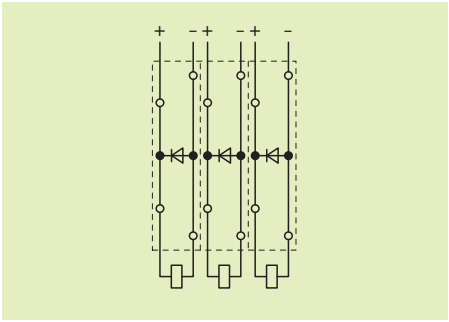

Used as recovery diodes

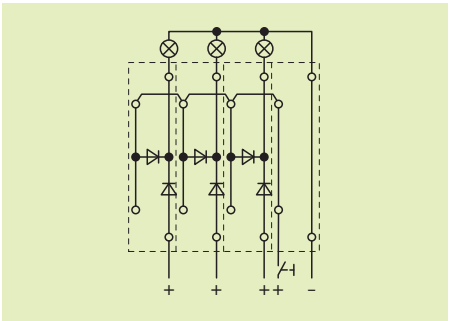

Used in lamp test circuit

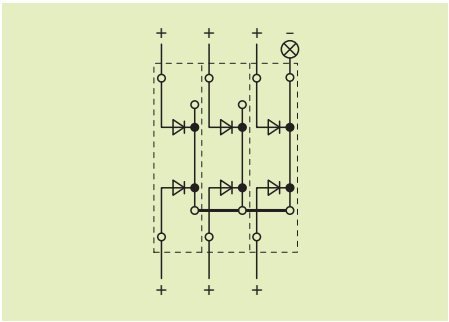

Used in lamp test circuit

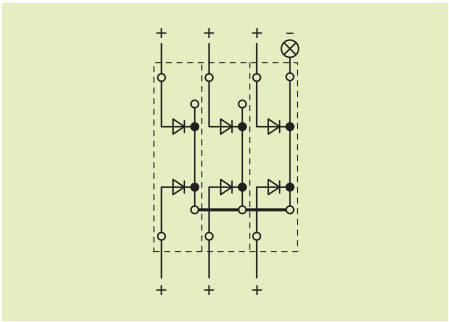

Used as collective fault indication

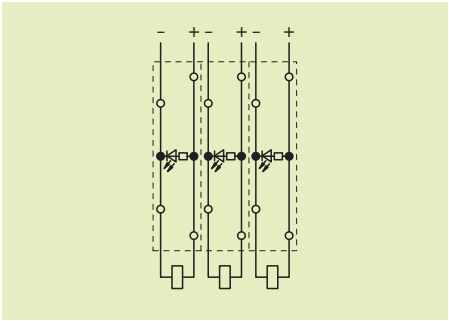

Voltage indication

Double Deck Diode Terminal Blocks
Double Deck LED Terminal Blocks 2.5 mm²/4 mm² / AWG 12
Series 870

	0.08 – 2.5 mm²/4 mm² "f-st" ❶ | AWG 28 – 12 U_N 250 V; U_{RM} 1000 V 1 N 4007 – 0.5 A continuous current Terminal block width 5 mm / 0.197 in 6 – 7 mm / 0.26 in	0.08 – 2.5 mm²/4 mm² "f-st" ❶ | AWG 28 – 12 U_N 250 V; U_{RM} 1000 V 1 N 4007 – 0.5 A continuous current Terminal block width 5 mm / 0.197 in 6 – 7 mm / 0.26 in

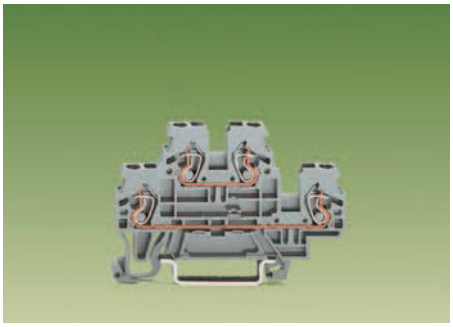

Through terminal blocks with the same shape see page 3.8

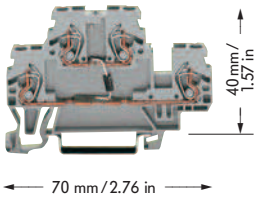

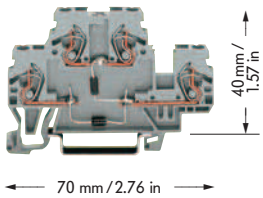

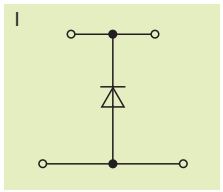

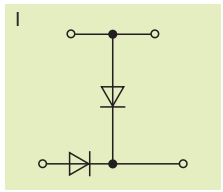

❶ Max. diameter of insulation: 4.4 mm / 0.173 in

Description		Item No.	Pack. unit pcs		Item No.	Pack. unit pcs
Double deck diode terminal block		**Double deck diode terminal blocks**			**Double deck diode terminal blocks**	
and		**with diode 1 N 4007**			**with 2 diodes 1 N 4007**	
double deck LED terminal block, for DIN 35 rail	Circuit I, grey	**870-540/281-410**	50	Circuit I, grey	**870-541/281-492**	50
	Circuit II, grey	**870-540/281-411**	50	Circuit II, grey	**870-541/281-491**	50

Accessories

Appropriate marking system **WMB/Mini-WSB** (see section 14)

	**End and intermediate plate**	2 mm / 0.079 in thick			2 mm / 0.079 in thick		
		grey	**870-518**	100 (4 x 25)	grey	**870-518**	100 (4 x 25)
		orange	**870-519**	100 (4 x 25)	orange	**870-519**	100 (4 x 25)
	**Push-in type jumper bars,**	2-way	**870-402**	200 (8 x 25)	2-way	**870-402**	200 (8 x 25)
	light grey, insulated,	3-way	**870-403**	200 (8 x 25)	3-way	**870-403**	200 (8 x 25)
	I_N 18 A	4-way	**870-404**	200 (8 x 25)	4-way	**870-404**	200 (8 x 25)
		5-way	**870-405**	100 (4 x 25)	5-way	**870-405**	100 (4 x 25)
		:	:		:	:	
		10-way	**870-410**	100 (4 x 25)	10-way	**870-410**	100 (4 x 25)
	**Push-in type jumper bars,**						
	light grey, insulated,	from 1 to 3	**870-433**	200 (8 x 25)	from 1 to 3	**870-433**	200 (8 x 25)
	I_N 18 A	from 1 to 4	**870-434**	200 (8 x 25)	from 1 to 4	**870-434**	200 (8 x 25)
		from 1 to 5	**870-435**	100 (4 x 25)	from 1 to 5	**870-435**	100 (4 x 25)
		:	:		:	:	
		from 1 to 10	**870-440**	100 (4 x 25)	from 1 to 10	**870-440**	100 (4 x 25)

Exemples of circuit configuration

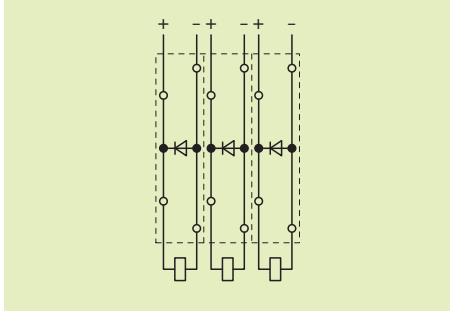

Used as recovery diodes

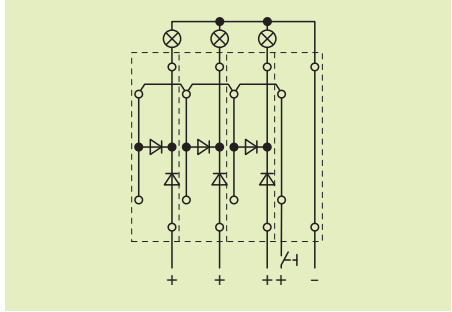

Used in lamp test circuit

0.08 – 2.5 mm²/4 mm² "f-st" ❶ | AWG 28 – 12 U_N 250 V; U_{RM} 1000 V 1 N 4007 – 0.5 A continuous current Terminal block width 5 mm / 0.197 in 6 – 7 mm / 0.26 in	0.08 – 2.5 mm²/4 mm² "f-st" ❶ | AWG 28 – 12 U_N 250 V; U_{RM} 1000 V 1 N 4007 – 0.5 A continuous current Terminal block width 5 mm / 0.197 in 6 – 7 mm / 0.26 in	0.08 – 2.5 mm²/4 mm² "f-st" ❶ | AWG 28 – 12 DC 24 V I_F 25 mA max. Terminal block width 5 mm / 0.197 in 6 – 7 mm / 0.26 in

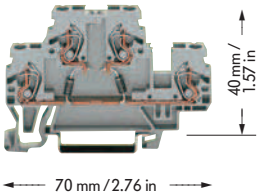

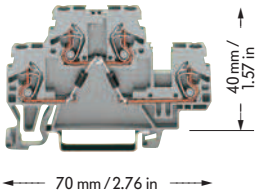

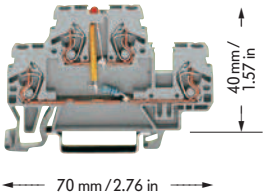

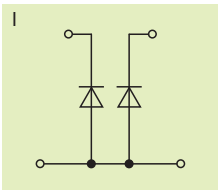

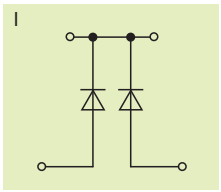

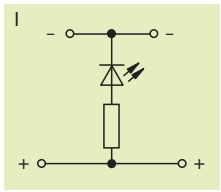

	Item No.	Pack. unit pcs		Item No.	Pack. unit pcs		Item No.	Pack. unit pcs
Double deck diode terminal blocks			**Double deck diode terminal blocks**			**Double deck LED terminal blocks**		
with 2 diodes 1 N 4007			**with 2 diodes 1 N 4007**			**with red LED,** DC 24 V		
Circuit I, grey	**870-542/281-487**	50	Circuit I, grey	**870-541/281-489**	50	Circuit I, grey	**870-543/281-434**	50
Circuit II, grey	**870-542/281-488**	50	Circuit II, grey	**870-541/281-490**	50	Circuit II, grey	**870-543/281-413**	50
Appropriate marking system **WMB/Mini-WSB** (see section 14)								
2 mm / 0.079 in thick			2 mm / 0.079 in thick			2 mm / 0.079 in thick		
grey	**870-518**	100 (4 x 25)	grey	**870-518**	100 (4 x 25)	grey	**870-518**	100 (4 x 25)
orange	**870-519**	100 (4 x 25)	orange	**870-519**	100 (4 x 25)	orange	**870-519**	100 (4 x 25)
2-way	**870-402**	200 (8 x 25)	2-way	**870-402**	200 (8 x 25)	2-way	**870-402**	200 (8 x 25)
3-way	**870-403**	200 (8 x 25)	3-way	**870-403**	200 (8 x 25)	3-way	**870-403**	200 (8 x 25)
4-way	**870-404**	200 (8 x 25)	4-way	**870-404**	200 (8 x 25)	4-way	**870-404**	200 (8 x 25)
5-way	**870-405**	100 (4 x 25)	5-way	**870-405**	100 (4 x 25)	5-way	**870-405**	100 (4 x 25)
:	:		:	:		:	:	
10-way	**870-410**	100 (4 x 25)	10-way	**870-410**	100 (4 x 25)	10-way	**870-410**	100 (4 x 25)
from 1 to 3	**870-433**	200 (8 x 25)	from 1 to 3	**870-433**	200 (8 x 25)	from 1 to 3	**870-433**	200 (8 x 25)
from 1 to 4	**870-434**	200 (8 x 25)	from 1 to 4	**870-434**	200 (8 x 25)	from 1 to 4	**870-434**	200 (8 x 25)
from 1 to 5	**870-435**	100 (4 x 25)	from 1 to 5	**870-435**	100 (4 x 25)	from 1 to 5	**870-435**	100 (4 x 25)
:	:		:	:		:	:	
from 1 to 10	**870-440**	100 (4 x 25)	from 1 to 10	**870-440**	100 (4 x 25)	from 1 to 10	**870-440**	100 (4 x 25)

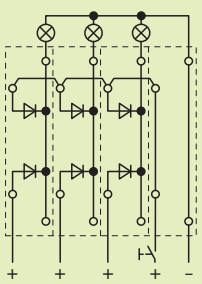

Used in lamp test circuit

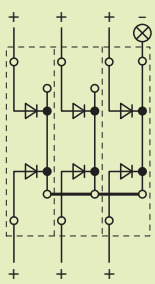

Used for collective fault indication

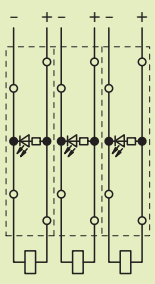

Used for voltage indication

Triple Deck Diode Terminal Blocks
Triple Deck LED Terminal Blocks 2.5 mm²/4 mm² / AWG 12
Series 870

	0.08 – 2.5 mm²/4 mm² "f-st" ❶ | AWG 28 – 12 U_N 250 V; U_{RM} 1000 V 1 N 4007 – 0.5 A continuous current Terminal block width 5 mm / 0.197 in 6 – 7 mm / 0.26 in	0.08 – 2.5 mm²/4 mm² "f-st" ❶ | AWG 28 – 12 U_N 250 V; U_{RM} 1000 V 1 N 4007 – 0.5 A continuous current Terminal block width 5 mm / 0.197 in 6 – 7 mm / 0.26 in

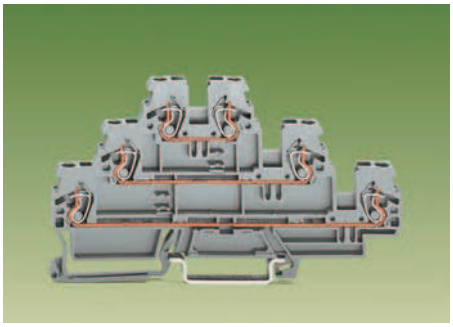

Through terminal blocks with the same shape see page 3.9

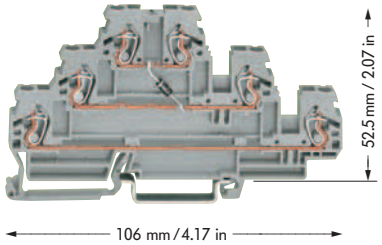

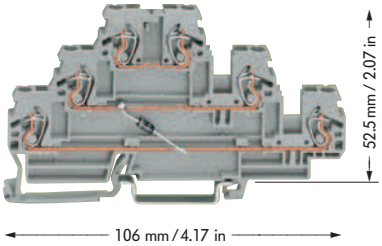

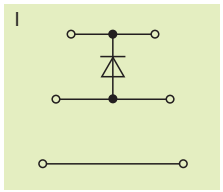

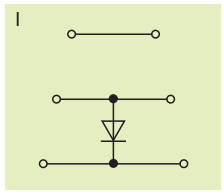

❶ Max. diameter of insulation: 4.4 mm / 0.173 in

Description		Item No.	Pack. unit pcs		Item No.	Pack. unit pcs
Triple deck diode terminal block		**Triple deck diode terminal blocks**			**Triple deck diode terminal blocks**	
and		**with diode 1 N 4007**			**with diode 1 N 4007**	
Triple deck LED terminal block, for DIN 35 rail	Circuit I, grey	**870-590/281-410**	50	Circuit I, grey	**870-590/281-675**	50
	Circuit II, grey	**870-590/281-411**	50	Circuit II, grey	**870-590/281-676**	50
Accessories	Appropriate marking system **WMB/Mini-WSB** (see section 14)					
 **End and intermediate plate**	2 mm / 0.079 in thick			2 mm / 0.079 in thick		
	grey	**870-568**	100 (4 x 25)	grey	**870-568**	100 (4 x 25)
	orange	**870-569**	100 (4 x 25)	orange	**870-569**	100 (4 x 25)
 **Push-in type jumper bars,** light grey, insulated, I_N 18 A	2-way	**870-402**	200 (8 x 25)	2-way	**870-402**	200 (8 x 25)
	3-way	**870-403**	200 (8 x 25)	3-way	**870-403**	200 (8 x 25)
	4-way	**870-404**	200 (8 x 25)	4-way	**870-404**	200 (8 x 25)
	5-way	**870-405**	100 (4 x 25)	5-way	**870-405**	100 (4 x 25)
	:	:		:	:	
	10-way	**870-410**	100 (4 x 25)	10-way	**870-410**	100 (4 x 25)
 **Push-in type jumper bars,** light grey, insulated, I_N 18 A						
	from 1 to 3	**870-433**	200 (8 x 25)	from 1 to 3	**870-433**	200 (8 x 25)
	from 1 to 4	**870-434**	200 (8 x 25)	from 1 to 4	**870-434**	200 (8 x 25)
	from 1 to 5	**870-435**	100 (4 x 25)	from 1 to 5	**870-435**	100 (4 x 25)
	:	:		:	:	
	from 1 to 10	**870-440**	100 (4 x 25)	from 1 to 10	**870-440**	100 (4 x 25)

0.08 – 2.5 mm²/4 mm² "f-st" ❶ | AWG 28 – 12 U_N 250 V; U_{RM} 1000 V 1 N 4007 – 0.5 A continuous current Terminal block width 5 mm / 0.197 in 6 – 7 mm / 0.26 in	0.08 – 2.5 mm²/4 mm² "f-st" ❶ | AWG 28 – 12 DC 24 V I_F 25 mA max. Terminal block width 5 mm / 0.197 in 6 – 7 mm / 0.26 in	

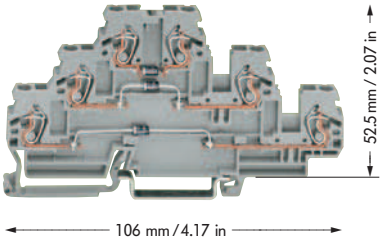

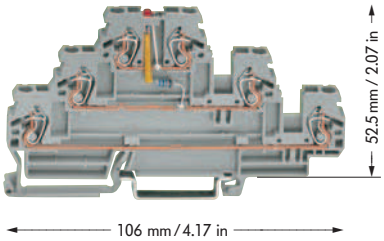

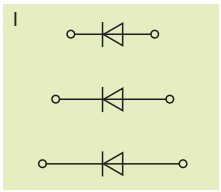

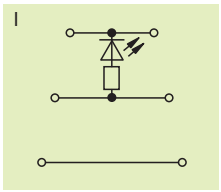

	Item No.	Pack. unit pcs		Item No.	Pack. unit pcs	
Triple deck diode terminal blocks			**Triple deck LED terminal blocks**			
with 3 diodes 1 N 4007			**with red LED,** DC 24 V			
Circuit I, grey	**870-596/281-673**	50	Circuit I, grey	**870-593/281-434**	50	
Circuit II, grey	**870-596/281-674**	50	Circuit II, grey	**870-593/281-413**	50	
Appropriate marking system **WMB/Mini-WSB** (see section 14)						
2 mm / 0.079 in thick			2 mm / 0.079 in thick			
grey	**870-568**	100 (4 x 25)	grey	**870-568**	100 (4 x 25)	
orange	**870-569**	100 (4 x 25)	orange	**870-569**	100 (4 x 25)	
2-way	**870-402**	200 (8 x 25)	2-way	**870-402**	200 (8 x 25)	
3-way	**870-403**	200 (8 x 25)	3-way	**870-403**	200 (8 x 25)	
4-way	**870-404**	200 (8 x 25)	4-way	**870-404**	200 (8 x 25)	
5-way	**870-405**	100 (4 x 25)	5-way	**870-405**	100 (4 x 25)	
:	:		:	:		
10-way	**870-410**	100 (4 x 25)	10-way	**870-410**	100 (4 x 25)	
from 1 to 3	**870-433**	200 (8 x 25)	from 1 to 3	**870-433**	200 (8 x 25)	
from 1 to 4	**870-434**	200 (8 x 25)	from 1 to 4	**870-434**	200 (8 x 25)	
from 1 to 5	**870-435**	100 (4 x 25)	from 1 to 5	**870-435**	100 (4 x 25)	
:	:		:	:		
from 1 to 10	**870-440**	100 (4 x 25)	from 1 to 10	**870-440**	100 (4 x 25)	

Pluggable Modules – Diodes on Carrier Terminal Blocks 2.5 mm² / AWG 14, Series 280

Diode module: diode 1 N 4007
V_N 250 V; V_{RM} 1000 V; 1 A max.
LED I_F 25 mA

Module width 5 mm / 0.197 in

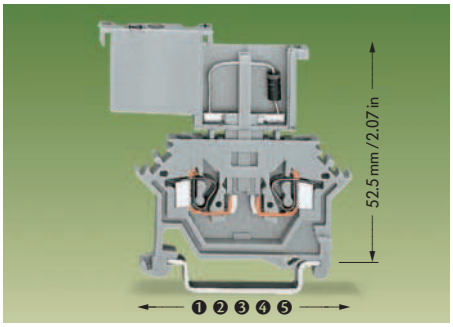



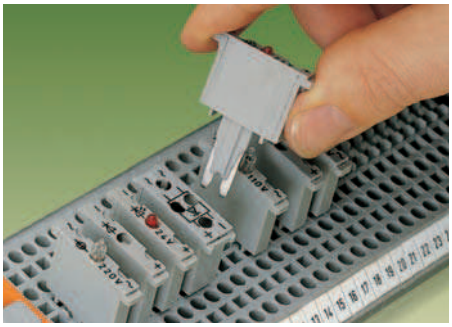

open side of term. block	Description		Item No.	Pack. unit pcs
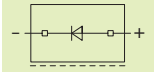	**Diode module,**			
	5 mm / 0.197 in wide,		**280-801/281-411**	100
	diode 1 N 4007			
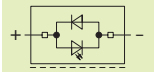	**Diode module,** 5 mm / 0.197 in			
	wide, diode 1 N 4007 as	DC 24 V	**280-801/281-420**	100
	free-wheeling diode and LED	DC 48 V	**280-801/281-421**	100

Carrier terminal blocks for pluggable modules and accessories

(Marking accessories see section 14)

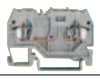	**2-cond. carrier term. block,**	Terminal block width 5 mm / 0.197 in		
	0.08 – 2.5 mm²/AWG 28 – 14	grey	**280-916** ❶	100
	stripped length 8 – 9 mm / 0.33 in			
	**End and intermediate plate,**	2.5 mm / 0.098 in thick		
	for 2-conductor carrier terminal	orange	**280-309**	100 (4 x 25)
	block 280-916	grey	**280-308**	100 (4 x 25)
	**2-cond. carrier term. block,**	Terminal block width 5 mm / 0.197 in		
	0.08 – 2.5 mm²/AWG 28 – 14	grey	**280-616** ❷	100
	stripped length 8 – 9 mm / 0.33 in			
	**End and intermediate plate,**	2.5 mm / 0.098 in thick		
	for 2-conductor carrier terminal	orange	**280-331**	100 (4 x 25)
	block 280-616	grey	**280-330**	100 (4 x 25)
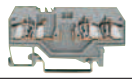	**3-cond. carrier term. block,**	Terminal block width 5 mm / 0.197 in		
	0.08 – 2.5 mm²/AWG 28 – 14	grey	**280-610** ❸	100
	stripped length 8 – 9 mm / 0.33 in			
	**End and intermediate plate,**	2.5 mm / 0.098 in thick		
	for 3-conductor carrier terminal	orange	**280-326**	100 (4 x 25)
	block 280-610	grey	**280-324**	100 (4 x 25)
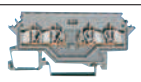	**4-cond. carrier term. block,**	Terminal block width 5 mm / 0.197 in		
	0.08 – 2.5 mm²/AWG 28 – 14	grey		
	stripped length 8 – 9 mm / 0.33 in	**280-606** ❹	**280-686** ❺	100
	**End and intermediate plate,**	2.5 mm / 0.098 in thick		
	for 4-conductor orange	**280-317**	**280-315**	100 (4 x 25)
	carrier terminal blocks grey	**280-316**	**280-314**	100 (4 x 25)
	**Comb type jumper bar,**	2-way	**280-482**	200 (8 x 25)
	insulated, see page 2.44	3-way	**280-483**	200 (8 x 25)
	$I_N = I_N$ of terminal block	10-way	**280-490**	50 (2 x 25)
	**Alternate comb type**			
	jumper bar, insulated,	2-way	**280-492**	200 (8 x 25)
	$I_N = I_N$ of terminal block			
	**Operating tool,**	2-way	**280-432**	1
	insulated	3-way	**280-433**	1
		10-way	**280-440**	1
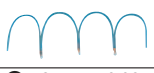	**Wire commoning chain,**	Commoning distance max. 120 mm / 4.72 in		
	insulated,	black	**210-103**	1
	50 connections, 8 A	blue	**210-123**	1

❶ 53 mm / 2.09 in
❷ 50 mm / 1.97 in
❸ 64 mm / 2.52 in
❹ Term. block marking on both sides 73 mm / 2.87 in
❺ Terminal block marking in center position 75 mm / 2.95 in

These diode modules, specially designed for the individual construction of, for example, lamp test circuits or collective fault indicating systems, offer the following advantages to the user:

- Separation into functional and wiring layer
- Polarized direction of switching
- High density with only 5 mm / 0.197 in width of terminal block and module.
- Quick and easy exchange of modules

Examples of circuit configuration

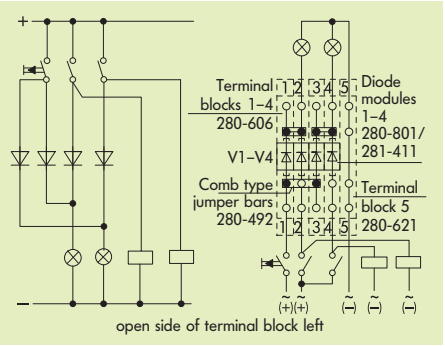

Lamp test circuit with blocking diodes

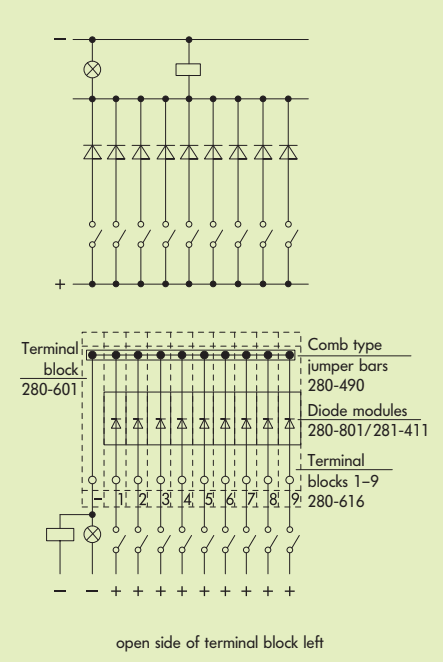

Diode gate for collective fault indication