Double-Deck Diode Terminal Blocks and LED Terminal Blocks 2.5 mm²
280 Series

0.08 - 2.5 mm² | AWG 28 - 14 U_N 250 V, U_{RM} 1000 V 1N4007 - 0.5 A continuous current Terminal block width 5 mm / 0.197 in 8 - 9 mm / 0.33 in ❶	0.08 - 2.5 mm² | AWG 28 - 14 U_N 250 V, U_{RM} 1000 V 1N4007 - 0.5 A continuous current Terminal block width 5 mm / 0.197 in 8 - 9 mm / 0.33 in ❶	0.08 - 2.5 mm² | AWG 28 - 14 24 VDC I_F 0.025 A max. Terminal block width 5 mm / 0.197 in 8 - 9 mm / 0.33 in ❶

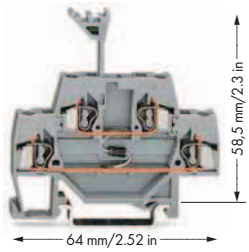

Circuit I Circuit II

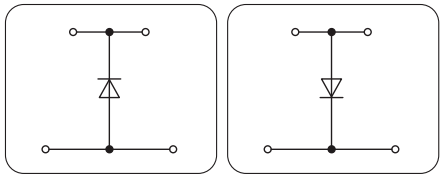

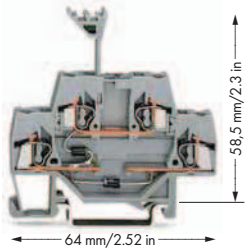

Circuit I Circuit II

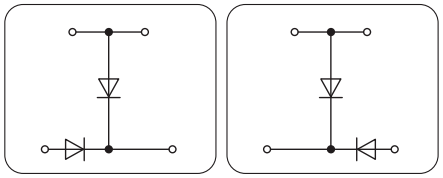

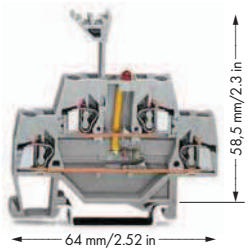

Circuit I Circuit II

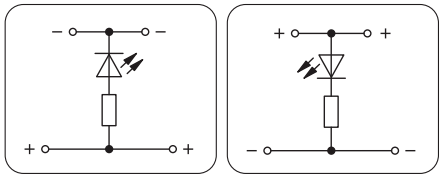

Item No.		Pack. Unit
Double-deck diode terminal block with 1N4007 diode, gray		
Circuit I	**280-940/281-410**	50
Circuit II	**280-940/281-411**	50

Item No.		Pack. Unit
Double-deck diode terminal block with 2 diodes 1N4007, gray		
Circuit I	**280-941/281-492**	50
Circuit II	**280-941/281-491**	50

Item No.		Pack. Unit
Double-deck LED terminal block with red LED, 24 VDC, gray		
Circuit I	**280-943/281-434**	50
Circuit II	**280-943/281-413**	50

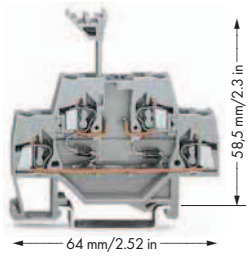

Circuit I Circuit II

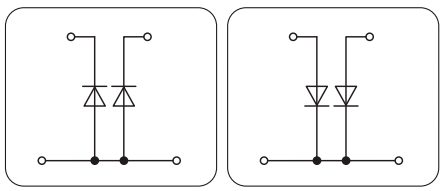

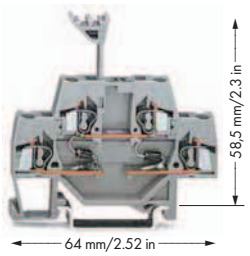

Circuit I Circuit II

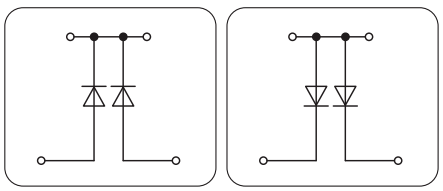

Item No.		Pack. Unit
Double-deck diode terminal block with 2 diodes 1N4007, gray		
Circuit I	**280-942/281-487**	50
Circuit II	**280-942/281-488**	50

Item No.		Pack. Unit
Double-deck diode terminal block with 2 diodes 1N4007, gray		
Circuit I	**280-941/281-489**	50
Circuit II	**280-941/281-490**	50

Through terminal blocks with same profile, see page 184

For list of approvals and user guide, see pages 634 to 637.

Circuit Configuration Examples
Double-Deck Diode and LED Terminal Blocks

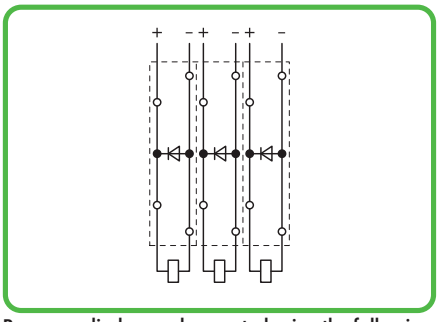

Recovery diodes can be created using the following terminal blocks:
280-940/281-410 or
280-940/281-411

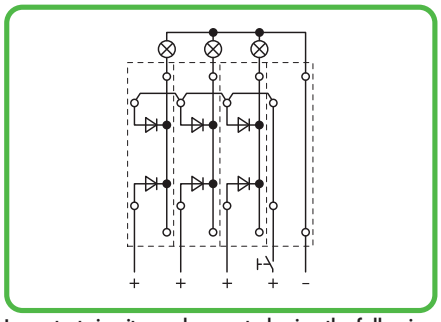

Lamp test circuits can be created using the following terminal blocks:
280-942/281-487 or
280-942/281-488

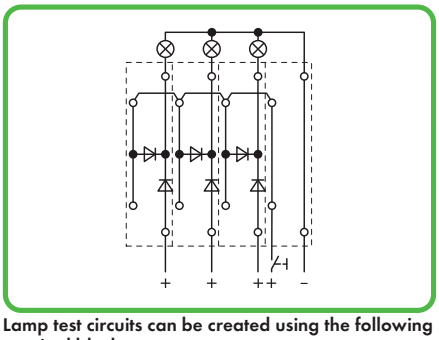

Lamp test circuits can be created using the following terminal blocks:
280-941/281-492 or
280-941/281-491

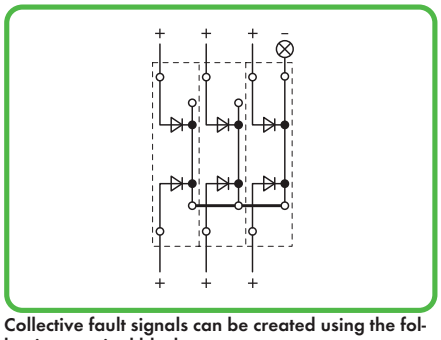

Collective fault signals can be created using the following terminal blocks:
280-941/281-489 or
280-941/281-490

Double-deck diode terminal blocks
have been specially developed for custom diode circuits, such as lamp test and collective fault signal circuits.
Using LED terminal blocks, monitoring units can be designed, e.g., for control and operating circuits.
The terminal blocks provide high-density wiring, while maintaining a width of only 5 mm/0.197 in.

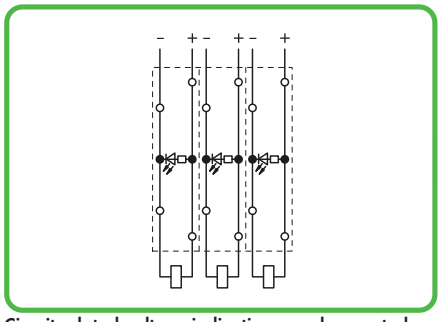

Circuit-related voltage indications can be created using the following terminal blocks:
280-943/281-434 or
280-943/281-413

❶ Strip length, see packaging or instructions.

280 Series Accessories

Appropriate marking systems
(see Section 13)

End and intermediate plate, 2.5 mm thick			
	orange	**280-341**	100 (4x25)
	gray	**280-340**	100 (4x25)
Insulation stop,			
	5 pcs/strip, 0.08 - 0.2 mm² "s" (0.14 mm² "f-st")		
	white	**280-470**	200 (8x25)
Insulation stop,			
	5 pcs/strip, 0.25 - 0.5 mm²		
	light gray	**280-471**	200 (8x25)
Insulation stop,			
	5 pcs/strip, 0.75 - 1 mm²		
	dark gray	**280-472**	200 (8x25)
Comb-style jumper bar, insulated,			
	$I_N = I_N$ terminal block		
	2-way	**280-482**	200 (8x25)
	3-way	**280-483**	200 (8x25)
Comb-style jumper bar, insulated,			
	$I_N = I_N$ terminal block		
	10-way	**280-490**	50 (2x25)
Alternate comb-style jumper bar,			
	insulated, $I_N = I_N$ terminal block		
	2-way	**280-492**	200 (8x25)
Operating tool, of insulating material			
	2-way	**280-432**	1
	3-way	**280-433**	1
Operating tool, of insulating material			
	10-way	**280-440**	1
Wire commoning chain, 50 connections,			
	insulated, I_N 8 A		
	black	**210-103**	1
Wire commoning chain, 50 connections,			
	insulated, I_N 8 A		
	blue	**210-123**	1

Double-Deck Diode Terminal Blocks and LED Terminal Blocks 4 mm²
281 Series

0.08 - 4 mm² | AWG 28 - 12 U_N 250 V, U_{RM} 1000 V 1N4007 - 0.5 A continuous current Terminal block width 6 mm / 0.236 in 9 - 10 mm / 0.37 in ❶	0.08 - 4 mm² | AWG 28 - 12 U_N 250 V, U_{RM} 1000 V 1N4007 - 0.5 A continuous current Terminal block width 6 mm / 0.236 in 9 - 10 mm / 0.37 in ❶	0.08 - 4 mm² | AWG 28 - 12 24 VDC I_F 0.025 A max. Terminal block width 6 mm / 0.236 in 9 - 10 mm / 0.37 in ❶

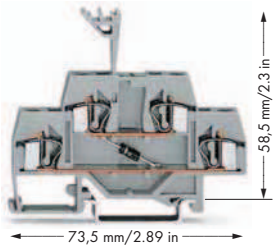

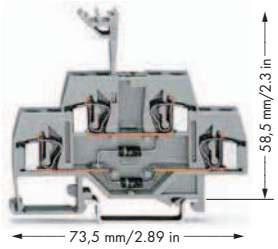

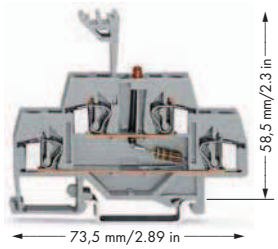

Circuit I Circuit II

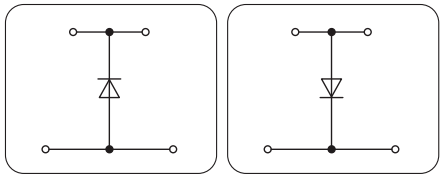

Circuit I Circuit II

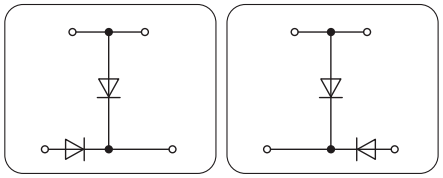

Circuit I Circuit II

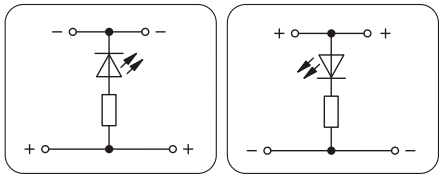

Item No.		Pack. Unit
Double-deck diode terminal block with 1N4007 diode, gray		
Circuit I	**281-633/281-410**	50
Circuit II	**281-633/281-411**	50

Item No.		Pack. Unit
Double-deck diode terminal block with 2 diodes 1N4007, gray		
Circuit I	**281-635/281-492**	50
Circuit II	**281-635/281-491**	50

Item No.		Pack. Unit
Double-deck LED terminal block with red LED, 24 VDC, gray		
Circuit I	**281-634/281-434**	50
Circuit II	**281-634/281-413**	50

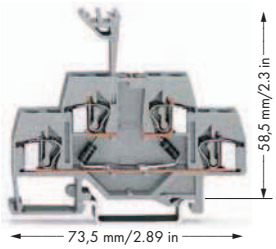

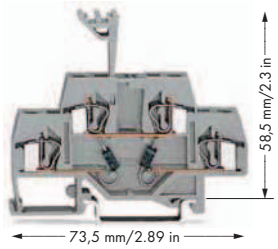

Circuit I Circuit II

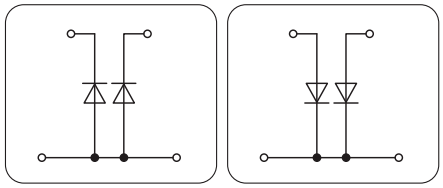

Circuit I Circuit II

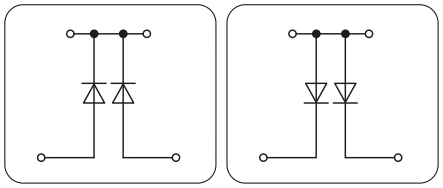

Item No.		Pack. Unit
Double-deck diode terminal block with 2 diodes 1N4007, gray		
Circuit I	**281-636/281-487**	50
Circuit II	**281-636/281-488**	50

Item No.		Pack. Unit
Double-deck diode terminal block with 2 diodes 1N4007, gray		
Circuit I	**281-635/281-489**	50
Circuit II	**281-635/281-490**	50

Through terminal blocks with same profile, see page 188

For list of approvals and user guide, see pages 634 to 637.

Circuit Configuration Examples
Double-Deck Diode and LED Terminal Blocks

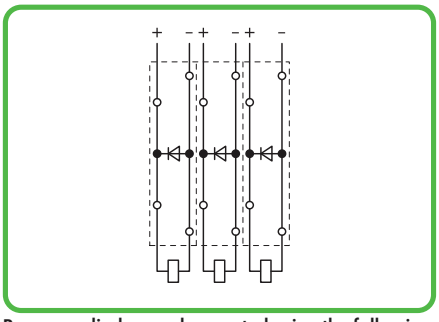

Recovery diodes can be created using the following terminal blocks:
281-633/281-410 or
281-633/281-411

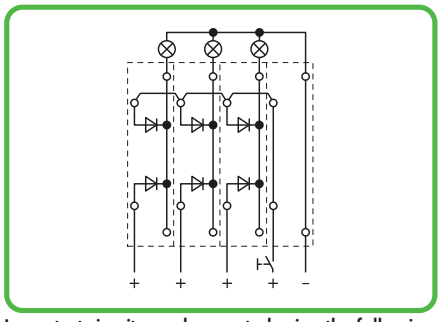

Lamp test circuits can be created using the following terminal blocks:
281-636/281-487 or
281-636/281-488

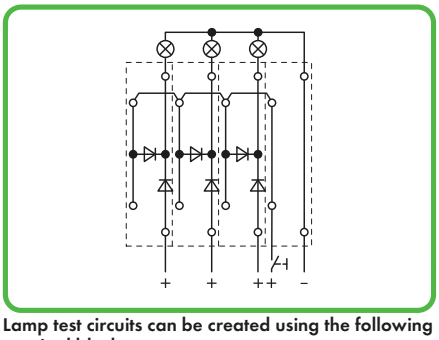

Lamp test circuits can be created using the following terminal blocks:
281-635/281-492 or
281-635/281-491

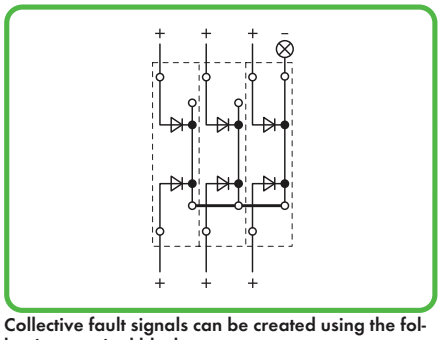

Collective fault signals can be created using the following terminal blocks:
281-635/281-489 or
281-635/281-490

Double-deck diode terminal blocks
have been specially developed for custom diode circuits, such as lamp test and collective fault signal circuits.
Using LED terminal blocks, monitoring units can be designed, e.g., for control and operating circuits.
The terminal blocks provide high-density wiring, while maintaining a width of only 6 mm/0.236 in.

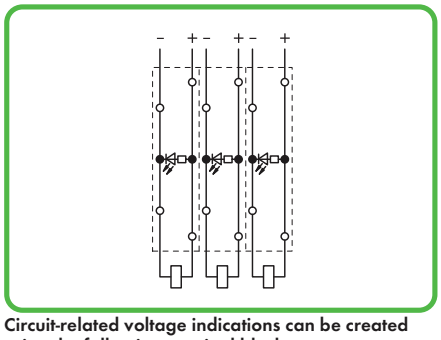

Circuit-related voltage indications can be created using the following terminal blocks:
281-634/281-434 or
281-634/281-413

❶ Strip length, see packaging or instructions.

281 Series Accessories

Appropriate marking system:
WMB (see Section 13)

End and intermediate plate, 2.5 mm thick			
	orange	**281-341**	100 (4x25)
	gray	**281-340**	100 (4x25)
Insulation stop,			
	5 pcs/strip,		
	0.08 - 0.2 mm² "s" (0.14 mm² "f-st")		
	white	**281-470**	200 (8x25)
Insulation stop,			
	5 pcs/strip,		
	0.25 - 0.5 mm²		
	light gray	**281-471**	200 (8x25)
Insulation stop,			
	5 pcs/strip,		
	0.25 - 1.5 mm²		
	dark gray	**281-472**	200 (8x25)
Comb-style jumper bar, insulated,			
	$I_N = I_N$ terminal block		
	2-way	**281-482**	100 (4x25)
	3-way	**281-483**	100 (4x25)
	5-way	**281-485**	100 (4x25)
	10-way	**281-490**	50 (2x25)
Alternate comb-style jumper bar,			
	insulated,		
	$I_N = I_N$ terminal block		
	2-way	**281-492**	100 (4x25)
Operating tool, of insulating material			
	2-way	**280-432**	1
	3-way	**280-433**	1
	5-way	**281-440**	1
Wire commoning chain, 50 connections,			
	insulated, I_N 8 A		
	black	**210-103**	1
Wire commoning chain, 50 connections,			
	insulated, I_N 8 A		
	blue	**210-123**	1

Pluggable Diode Modules on Carrier Terminal Blocks 2.5 mm²
280 Series

CAGE CLAMP®

Diode module
with 1N4007 diode
U_N 250 V, U_{RM} 1000 V
I_N 1 A
Plug width 5 mm / 0.197 in



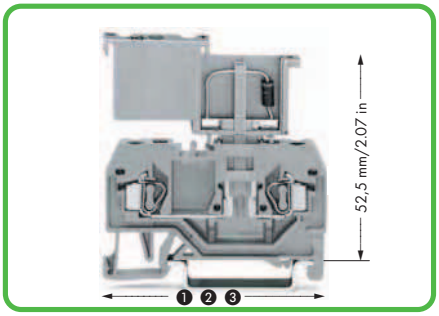

These diode have been designed for use in lamp test circuits or collective fault indicating systems, and offer the following advantages:
- Separation into functional and wiring level
- Polarized direction of switching
- Quick and easy exchange of modules
- High density with only 5 mm/0.197 in width of terminal block and module.

For terminal blocks with side marking, see www.wagocatalog.com

1 Length of 280-916: 53 mm / 2.09 in
2-conductor carrier terminal block, front-entry

2 Length of 280-610: 64 mm / 2.52 in
3-conductor carrier terminal block, front-entry

3 Length of 280-816: 75 mm / 2.95 in
4-conductor carrier terminal block, front-entry

4 See application notes for:
Insulation stop, page 199
Comb-style jumper bar, page 200
Operating tool, page 200

Circuit I Circuit II

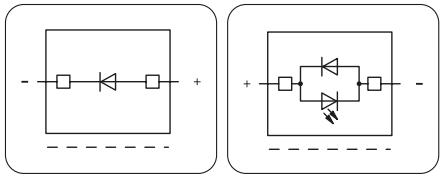

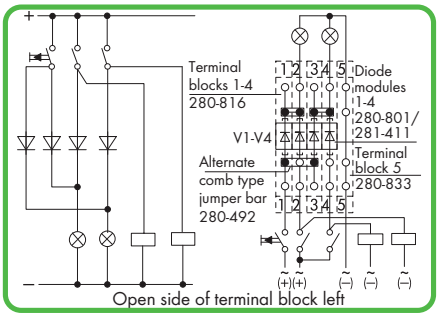

Lamp test circuit with blocking diodes

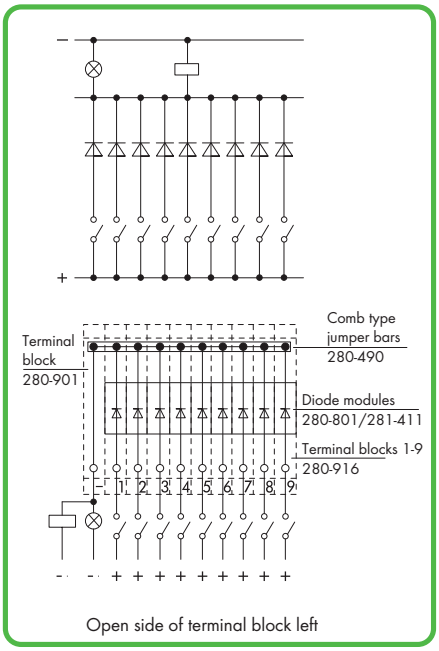

Diode gate for collective fault indication

	Item No.	Pack. Unit
Diode module,		
with 1N4007 diode,		
5 mm wide		
○	**280-801/281-411**	100
Diode module,		
with recovery diode 1N4007,		
red LED,		
5 mm wide		
○ 24 VDC	**280-801/281-420**	100
○ 48 VDC	**280-801/281-421**	100

Carrier Term. Blocks and Accessories

Appropriate marking system:
WMB (see Section 13)

2-conductor carrier terminal block,			
1	0.08 - 2.5 mm² / AWG 28 - 14,		
	Terminal block width 5 mm / 0.197 in		
	gray	**280-916**	100
End and intermediate plate, 2.5 mm thick			
	orange	**280-309**	100 (4x25)
	gray	**280-308**	100 (4x25)
3-conductor carrier terminal block,			
2	0.08 - 2.5 mm² / AWG 28 - 14,		
	Terminal block width 5 mm / 0.197 in		
	gray	**280-610**	100
End and intermediate plate, 2.5 mm thick			
	orange	**280-326**	100 (4x25)
	gray	**280-324**	100 (4x25)
4-conductor carrier terminal block,			
3	0.08 - 2.5 mm² / AWG 28 - 14,		
	Terminal block width 5 mm / 0.197 in		
	gray	**280-816**	100
End and intermediate plate, 2.5 mm thick			
	orange	**280-315**	100 (4x25)
	gray	**280-314**	100 (4x25)

Accessories

Insulation stop,			
4	5 pcs/strip,		
	0.08 - 0.2 mm² "s" (0.14 mm² "f-st")		
	white	**280-470**	200 (8x25)
Insulation stop,			
4	5 pcs/strip,		
	0.25 - 0.5 mm²		
	light gray	**280-471**	200 (8x25)
Insulation stop,			
4	5 pcs/strip,		
	0.75 - 1 mm²		
	dark gray	**280-472**	200 (8x25)
Comb-style jumper bar, insulated,			
4	I_N = I_N terminal block		
	2-way	**280-482**	200 (8x25)
	3-way	**280-483**	200 (8x25)
Comb-style jumper bar, insulated,			
	I_N = I_N terminal block		
	10-way	**280-490**	50 (2x25)
Alternate comb-style jumper bar,			
	insulated,		
	I_N = I_N terminal block		
	2-way	**280-492**	200 (8x25)
Operating tool, of insulating material			
	2-way	**280-432**	1
	3-way	**280-433**	1
Operating tool, of insulating material			
	10-way	**280-440**	1
Wire commoning chain, 50 connections,			
	insulated, I_N 8 A		
	black	**210-103**	1
Wire commoning chain, 50 connections,			
	insulated, I_N 8 A		
	blue	**210-123**	1

For list of approvals and user guide, see pages 634 to 637.

Pluggable Diode Modules on Through Terminal Blocks 2.5 mm²
280 Series

Diode module
with 1N4007 diode
U_N 250 V, U_{RM} 1000 V
I_N 1 A
Plug width 10 mm / 0.394 in



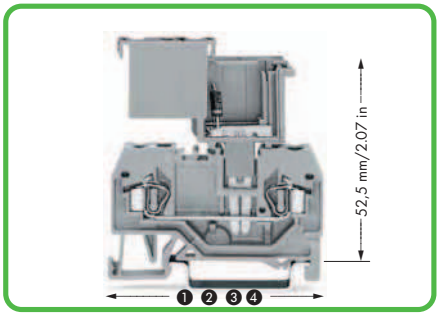

Similar to a push-in jumper, these diode modules are simply pushed into the contact slots of the current bars for two adjacent through terminal blocks.
This offers the following advantages:
- The modules are suitable for all 280 Series through terminal blocks.
- Easily retrofit terminal blocks with diode modules.

For terminal blocks with side marking, see www.wagocatalog.com

* AWG 12: THHN, THWN

1. Length of 280-901: 53 mm / 2.09 in
   2-conductor through terminal block, front-entry
2. Length of 280-681: 64 mm / 2.52 in
   3-conductor through terminal block, front-entry
3. Length of 280-833: 75 mm / 2.95 in
   4-conductor through terminal block, front-entry
4. Length of 280-101: 42.5 mm / 1.67 in
   2-conductor through terminal block, side-entry
5. See application notes for:
   Insulation stop, page 199
   Comb-style jumper bar, page 200
   Operating tool, page 200

Circuit I Circuit II

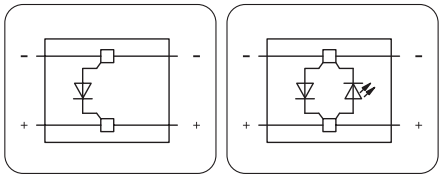

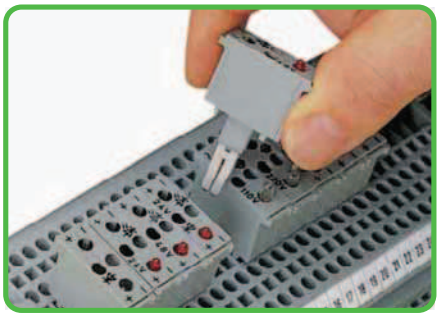

Further advantages:
- Separation into functional and wiring level
- Modules can be replaced quickly by other types of modules

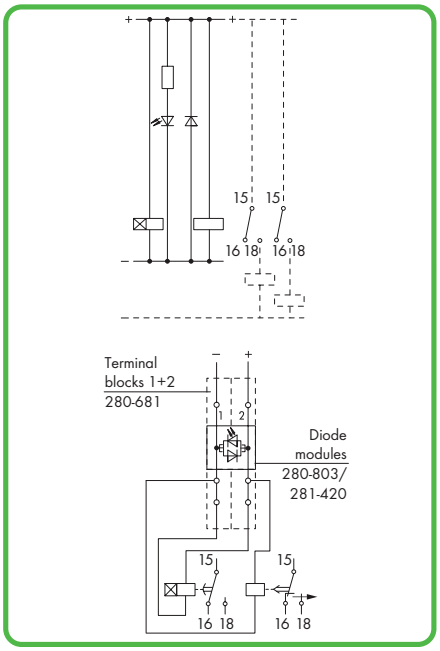

Free-wheeling diode and voltage check

	Item No.	Pack. Unit
Diode module, with 1N4007 diode, 10 mm wide		
◯	**280-803/281-411**	50
Diode module, with recovery diode 1N4007, additional LED, 10 mm wide		
◯ 24 VDC	**280-803/281-420**	50
◯ 48 VDC	**280-803/281-421**	50

Through Term. Blocks and Accessories

Appropriate marking system:
WMB (see Section 13)

2-conductor through terminal block,			
❶	0.08 - 2.5 mm² / AWG 28 - 12 *, Terminal block width 5 mm / 0.197 in		
	gray	**280-901**	100
End and intermediate plate, 2.5 mm thick			
	orange	**280-309**	100 (4x25)
	gray	**280-308**	100 (4x25)
3-conductor through terminal block,			
❷	0.08 - 2.5 mm² / AWG 28 - 12 *, Terminal block width 5 mm / 0.197 in		
	gray	**280-681**	100
End and intermediate plate, 2.5 mm thick			
	orange	**280-326**	100 (4x25)
	gray	**280-324**	100 (4x25)
4-conductor through terminal block,			
❸	0.08 - 2.5 mm² / AWG 28 - 12 *, Terminal block width 5 mm / 0.197 in		
	gray	**280-833**	100
End and intermediate plate, 2.5 mm thick			
	orange	**280-315**	100 (4x25)
	gray	**280-314**	100 (4x25)

Accessories

2-conductor through terminal block,			
❹	0.08 - 2.5 mm² / AWG 28 - 12 *, Terminal block width 5 mm / 0.197 in		
	gray	**280-101**	100
End and intermediate plate, 2.5 mm thick			
	orange	**280-302**	100 (4x25)
	gray	**280-301**	100 (4x25)
Insulation stop,			
❺	5 pcs/strip, 0.08 - 0.2 mm² "s" (0.14 mm² "f-st")		
	white	**280-470**	200 (8x25)
Insulation stop,			
❺	5 pcs/strip, 0.25 - 0.5 mm²		
	light gray	**280-471**	200 (8x25)
Insulation stop,			
❺	5 pcs/strip, 0.75 - 1 mm²		
	dark gray	**280-472**	200 (8x25)
Adjacent jumper, insulated,			
	I_N = I_N terminal block		
	gray	**280-402**	200 (8x25)
Wire commoning chain, 50 connections,			
	insulated, I_N 8 A		
	black	**210-103**	1
Wire commoning chain, 50 connections,			
	insulated, I_N 8 A		
	blue	**210-123**	1

For list of approvals and user guide, see pages 634 to 637.

Pluggable LED and Neon Indicator Modules on Carrier Terminal Blocks 2.5 mm²
280 Series

CAGE CLAMP®

LED module
I_N 5.6 mA; I_F 25 mA
Neon indicator module
I_N 0.5 mA
Plug width 5 mm / 0.197 in



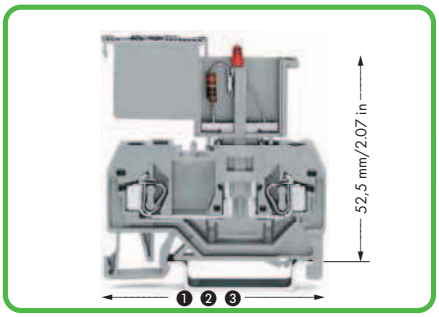

The monitoring of control and operating current circuits with LED and neon indicator modules on rail-mounted terminal blocks offers various advantages to the user:
- No additional cost for assembly and wiring
- Separation into functional and wiring level
- Modules can be replaced quickly and easily by other types of modules

1. Length of 280-916: 53 mm / 2.09 in 2-conductor carrier terminal block, front-entry
2. Length of 280-610: 64 mm / 2.52 in 3-conductor carrier terminal block, front-entry
3. Length of 280-816: 75 mm / 2.95 in 4-conductor carrier terminal block, front-entry

	Item No.	Pack. Unit
LED module,		
with red LED,		
5 mm wide		
◯ 24 VDC	**280-801/281-413**	100
◯ 48 VDC	**280-801/281-414**	100
LED module,		
with red LED,		
5 mm wide		
◯ 24 V AC/DC	**280-801/281-415**	100
◯ 48 V AC/DC	**280-801/281-416**	100
Neon indicator module,		
5 mm wide		
◯ 120 V AC/DC	**280-801/281-418**	100
◯ 230 V AC/DC	**280-801/281-417**	100

Carrier terminal blocks, see page 264



Futher advantages:
- Polarized direction of switching
- High density with only 5 mm/0.197 in width of terminal block and module

For terminal blocks with side marking, see www.wagocatalog.com

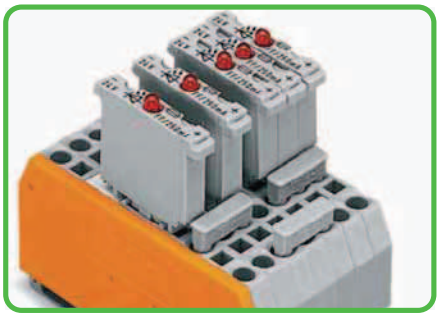

Carrier terminal blocks with component plugs
Alternate comb-style jumper bars
3-way, comb-style jumper bar

Circuit Diagrams

LED module

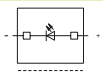

24 VDC **280-801/281-413**
48 VDC **280-801/281-414**
100

LED module

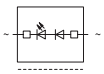

24 V AC/DC **280-801/281-415**
48 V AC/DC **280-801/281-416**
100

Neon indicator module

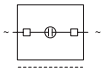

120 V AC/DC **280-801/281-418**
230 V AC/DC **280-801/281-417**
100

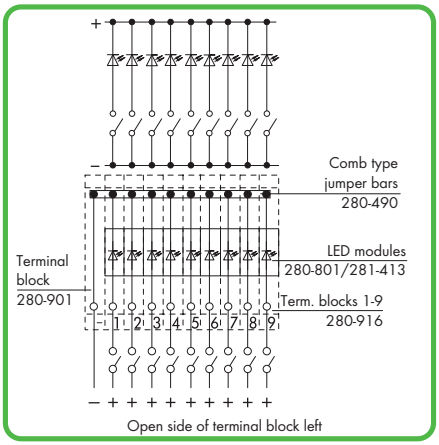

LED gate for collective fault indication – individual display

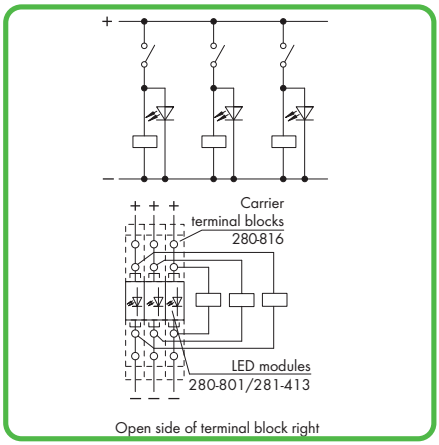

Voltage control refers to current circuits

For list of approvals and user guide, see pages 634 to 637.