# TOPJOB®S
# 2007-8821 Current Transformer Terminal Blocks (Orange Disconnect Link)

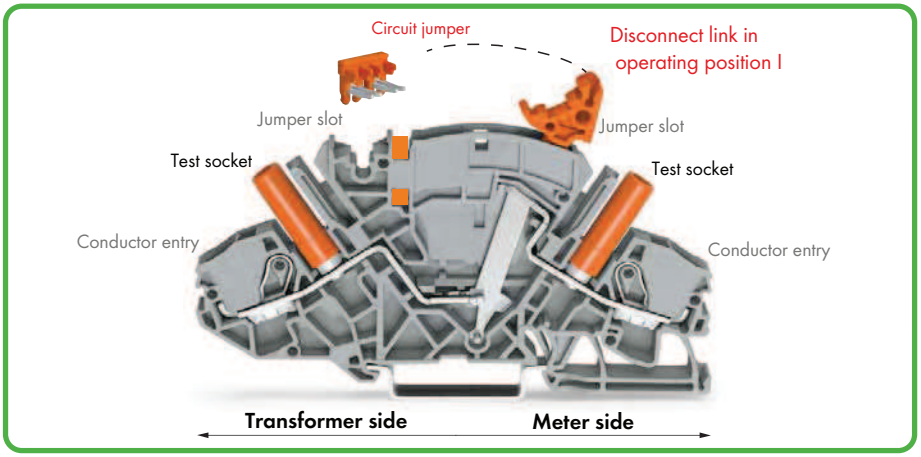


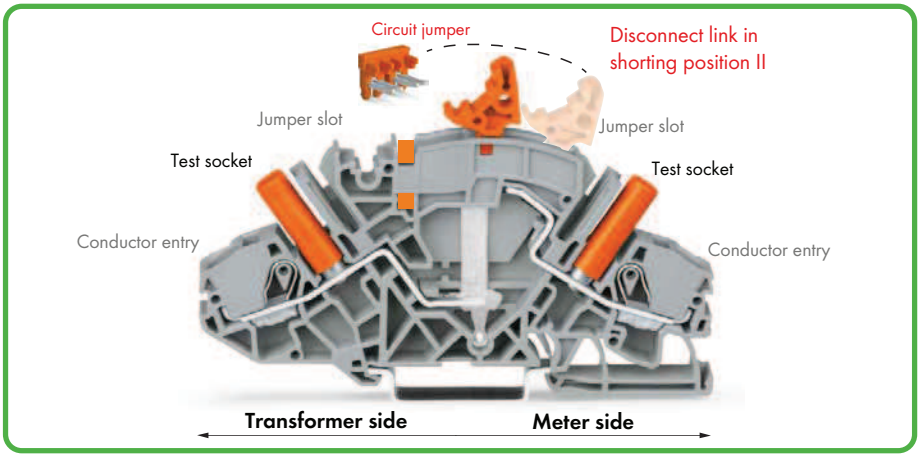


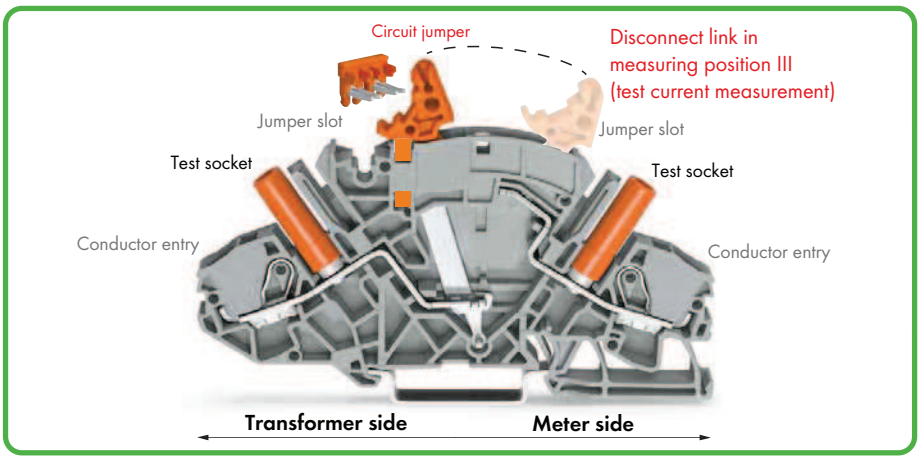


The TOPJOB® S current transformer (disconnect/test) terminal block **(2007-8821)** has been specially designed for current and voltage transformer circuits to measure the current transformer's operability.

First, the current transformer is shorted via disconnect link and circuit jumper (insert jumper, move disconnect link from operation position I to shorting position II, activate shorting path). Connecting a measuring device via test socket on the meter side can only be performed once circuit disconnection is complete (disconnect link in measuring position III).

- Features top-of-unit circuit jumper slot for shorting path activation.
- Disconnect link provides intuitive and easy operation, as well as exact switching status indication.
- Combines high functionality with compact design (99.6 mm long and 8 mm wide).
- All 2007 Series terminal blocks are rated 30 A/500 V (IEC) and 300 V (UL).
- With a terminal block width of 8 mm, the maximum cross-section for solid and fine-stranded conductors is 10 mm² (AWG 8) and 6 mm² (AWG 10) for ferruled conductors.
- Touch-proof test sockets for 4 mm Ø test plugs on transformer and meter side.
- Compatible with through and ground conductor terminal blocks of same profile.










**Preparing the shorting path for current transformer circuits**
Inserting insulated, touch-proof circuit jumpers into jumper slot. Using locking covers or profiles for adjacent terminal blocks allows disconnect links to be operated simultaneously.



**CAGE CLAMP®S clamps the following copper conductors:***

solid



stranded



fine-stranded, also with tinned single strands

# Implementing a Current and Voltage Transformer Circuit

## Disconnect link in operating position I

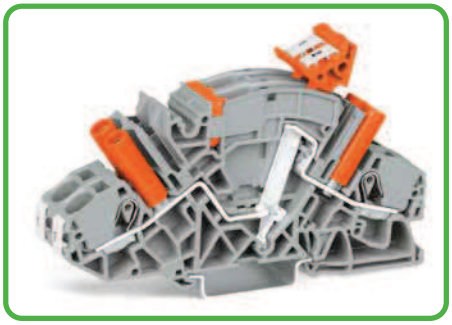

Terminal blocks required:
2 x disconnect/test terminal block 2007-8821
1 x circuit jumper, orange 2007-8442
optional with locking covers or interlocking links

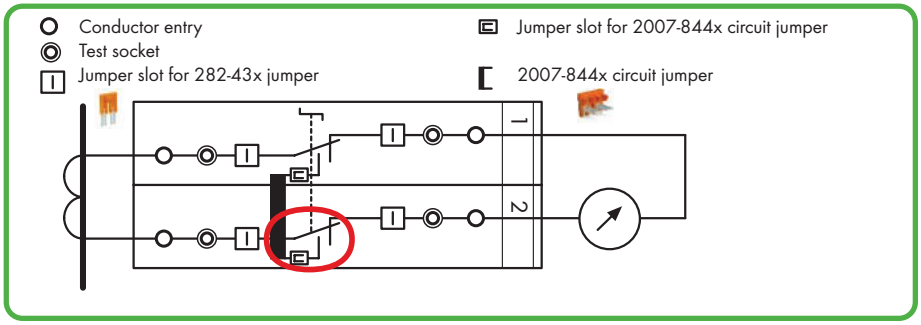


In operating position, the measuring device is connected to the transformer, the circuit jumper is inserted and the disconnect link is in position I.

## Disconnect link in shorting position II

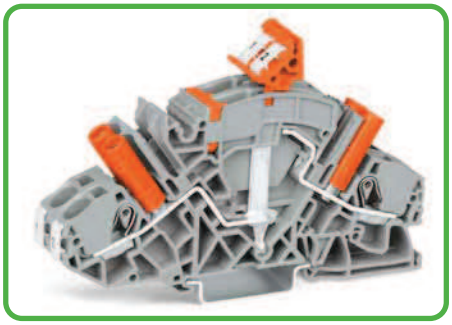

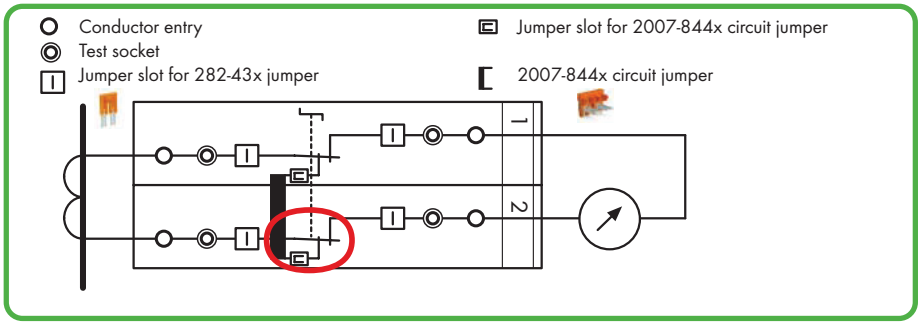


The transformer is **not** disconnected from the measuring device yet, the shorting path is activated by moving the disconnect link into shorting position II and the transformer is safely shorted.

## Measuring, disconnect link in measuring position III / test current measurement

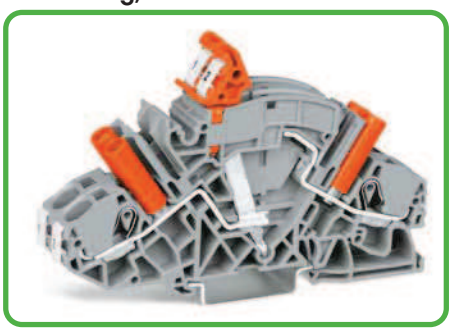

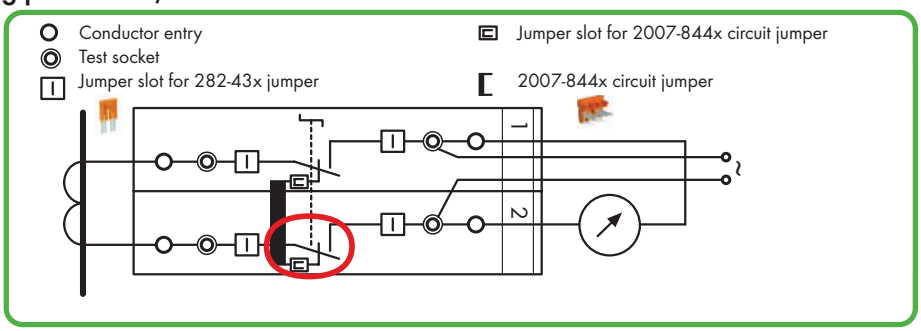


The measuring device/relay is electrically disconnected from the transformer. If required, an external voltage can be applied to the measuring device/relay via the test socket.

## Measurement testing via both test sockets

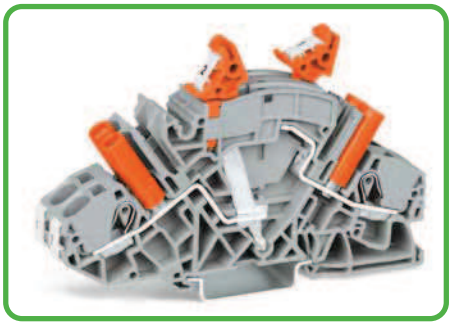

Terminal block 1: Disconnect link in operating position I
Terminal block 2: Disconnect link in measuring position III

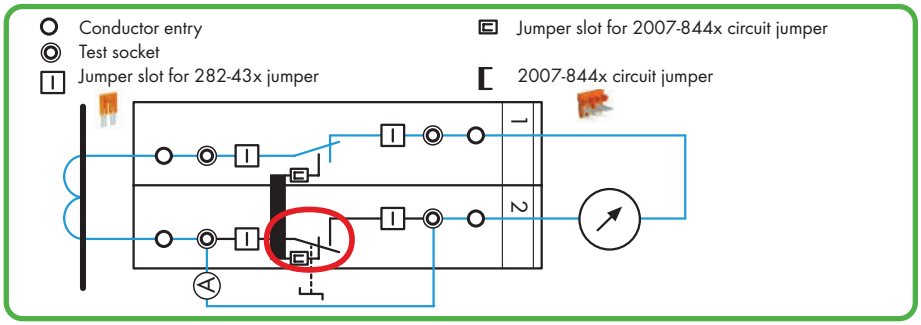


Measurement testing: First insert the reference current meter (A) into the test socket, then move the disconnect link into measurement position III (test current measurement).



fine-stranded,
tip-bonded



fine-stranded,
with ferrule
(gastight crimped)



fine-stranded,
with pin terminal
(gastight crimped)

# Examples for Current Transformer Circuits

## Measuring set for a 3-phase current transformer

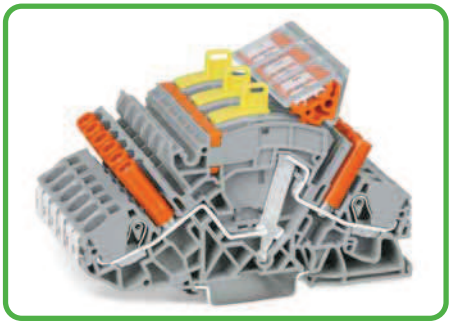

Terminal blocks required:

| | |
|---|---|
| 6 x disconnect/test terminal block | 2007-8821 |
| 3 x circuit jumper, orange | 2007-8442 |

In addition: interlocking links, locking covers, lock-outs

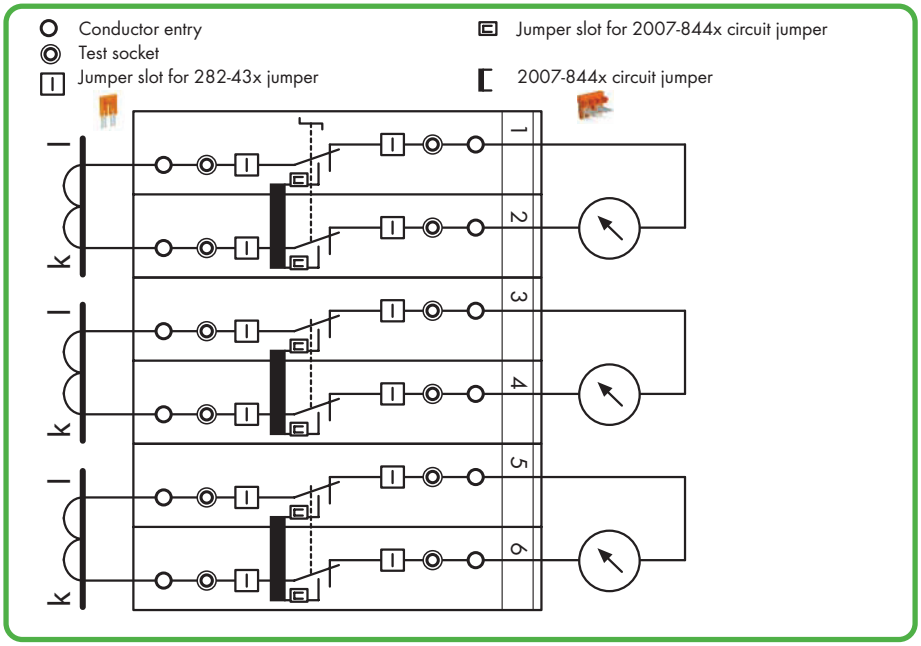


Pairs of disconnect links are interconnected via locking covers or interlocking links.
Measurement testing is performed after the interlocking is released.

## Measuring set for a 3-phase current transformer with 'Y' point

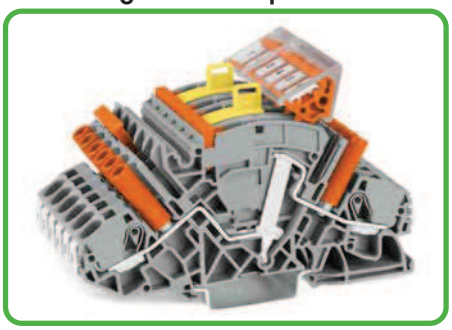

Terminal blocks required:

| | |
|---|---|
| 6 x disconnect/test terminal block | 2007-8821 |
| 1 x circuit jumper, orange | 2007-8446 |
| 1 x jumper, orange | 282-433 |

In addition: interlocking links, locking covers, lock-outs

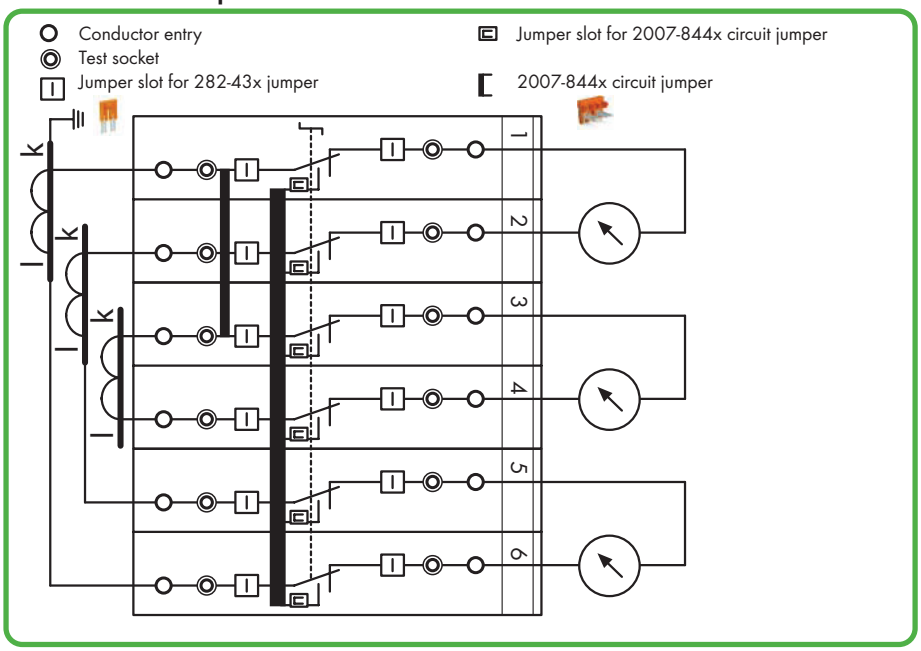


All 6 disconnect links are interconnected via via locking covers or interlocking links.

# TOPJOB®S
# 2007-8811 Voltage Transformer Terminal Blocks (Light Gray Disconnect Link)

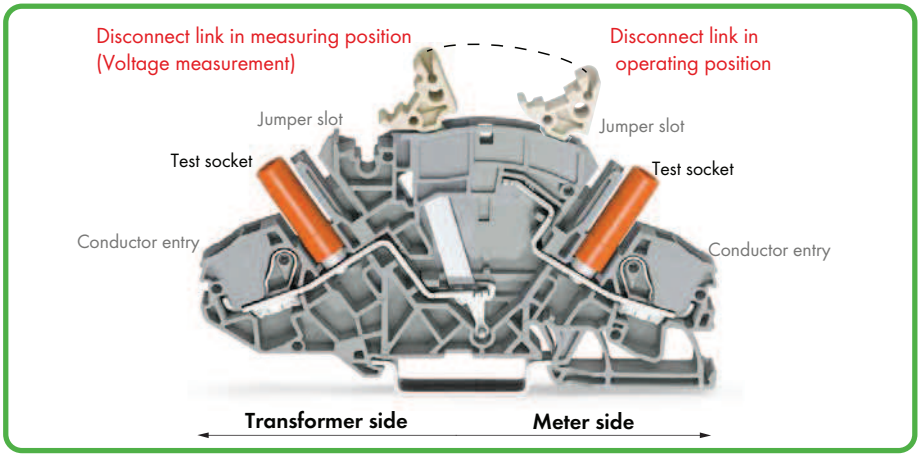


The TOPJOB® S voltage transformer (disconnect/test) terminal block **(2007-8811)** has been specially designed for voltage transformer circuits.

First, the voltage transformer must be disconnected from the circuit (from operating position to measurting position). Connecting a measuring device via test socket on the meter side can only be performed once circuit disconnection is completed (measuring position).

- For voltage transformer circuits (no circuit jumper slot required as for current transformer terminal block 2007-8821).
- Disconnect link provides intuitive and easy operation, as well as exact switching status indication.
- Combines high functionality with compact design (99.6 mm long and 8 mm wide).
- All 2007 Series terminal blocks are rated at 30 A/500 V (IEC) and 300 V (UL).
- With a terminal block width of 8 mm, the maximum cross-section for solid and fine-stranded conductors is 10 mm² (AWG 8) and 6 mm² (AWG 10) for ferruled conductors.
- Touch-proof test sockets for 4 mm Ø test plugs on transformer and meter side.
- Compatible with through and ground conductor terminal blocks of same profile.

## Example for voltage transformer testing
## Measuring set for single-phase voltage transformer testing

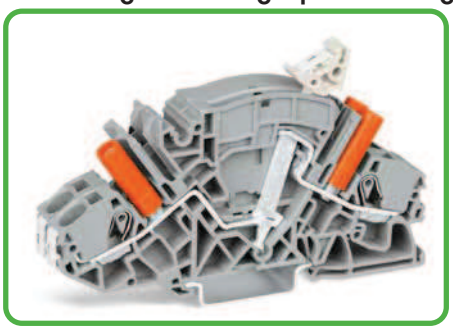

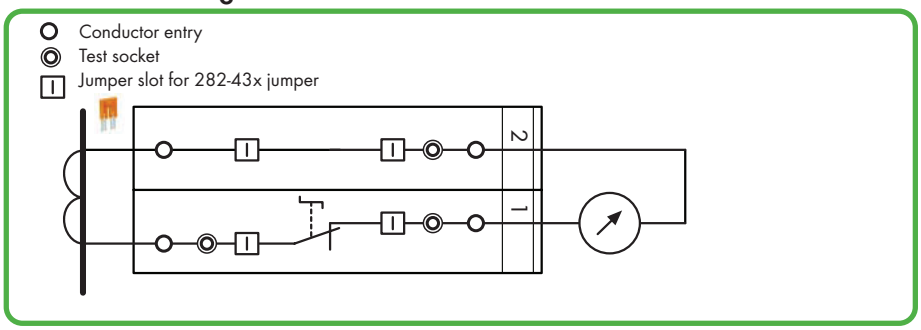


Terminal blocks required:

| | |
|---|---|
| 1 x disconnect/test terminal block | 2007-8811 |
| 1 x through terminal block | 2007-8801 |
| 1 x end plate, orange | 2007-8892 |

In addition: locking cover, lock-out

Disconnecting the voltage transformer from the circuit: Move disconnect link from operating position to measuring position.
Voltage measurement: Connecting a measuring device via test socket on the meter side can only be performed after disconnection is completed (measuring position).

## Marking

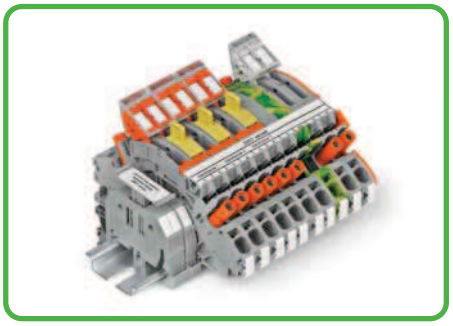

Marking via WMB Multi markers or marking strips.

## Commoning

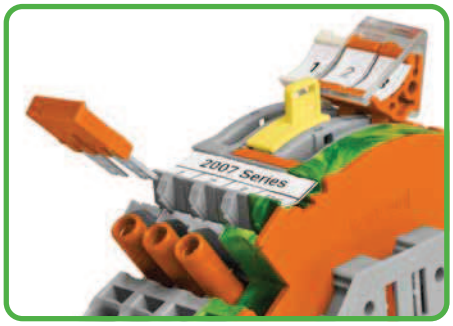


Additional commoning option via circuit-related jumpers or testing via test plug adapters (209-170) on transformer side

## Locking cover for disconnect links




Multipole switching via snap-on type, transparent (locking) cover for disconnect links.

# TOPJOB®S
# Disconnect Terminal Blocks for Test and Measurement, 6 mm²/30 A, for Current and Voltage Transformer Circuits, 2006 Series

| | | |
|---|---|---|
| 0.5 - 6 (10) mm² ❶ \| AWG 20 - 8<br>500 V/6 kV/3 ❷<br>$I_N$ 30 A<br>Terminal block width 8 mm / 0.315 in<br>13 - 15 mm / 0.55 in ❸ | 0.5 - 6 (10) mm² ❶ \| AWG 20 - 8<br>500 V/6 kV/3 ❷<br>$I_N$ 30 A<br>Terminal block width 8 mm / 0.315 in<br>13 - 15 mm / 0.55 in ❸ | 0.5 - 6 (10) mm² ❶ \| AWG 20 - 8<br>500 V/6 kV/3 ❷<br>$I_N$ 30 A<br>Terminal block width 8 mm / 0.315 in<br>13 - 15 mm / 0.55 in ❸ |

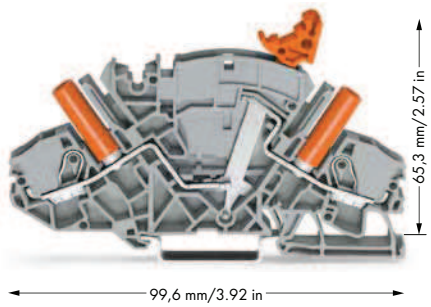


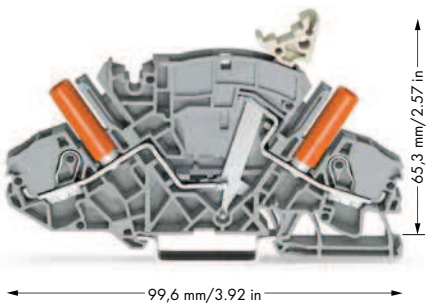


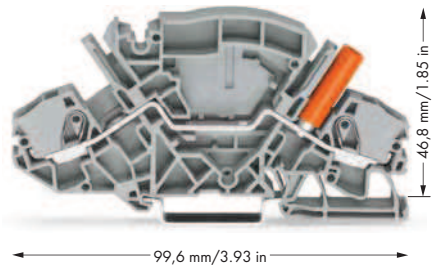


| Item No. | | Pack. Unit |
|---|---|---|
| **2-conductor disconnect terminal block for test and measurement,** e.g., current and voltage transformer circuits, with receptacle for adjacent jumper with switch lever, with touch-proof test sockets, for 4 mm Ø test plug | | |
| gray | **2007-8821** | 20 |

| Item No. | | Pack. Unit |
|---|---|---|
| **2-conductor disconnect terminal block,** with touch-proof test sockets, for 4 mm Ø test plug | | |
| gray | **2007-8811** | 20 |

| Item No. | | Pack. Unit |
|---|---|---|
| **2-conductor through terminal block,** with touch-proof test socket, for 4 mm Ø test plug | | |
| gray | **2007-8801** | 20 |

## Item-Specific Accessories

**Adjacent jumper for switch lever,** insulated, orange,



| $I_N$ 30 A | | |
|---|---|---|
| 2-way | **2007-8442** | 50 (5x10) |
| 3-way | **2007-8443** | 50 (5x10) |
| 4-way | **2007-8444** | 50 (5x10) |
| 5-way | **2007-8445** | 50 (5x10) |
| 6-way | **2007-8446** | 50 (5x10) |
| 7-way | **2007-8447** | 50 (5x10) |
| 8-way | **2007-8448** | 50 (5x10) |

## 2006 Series Accessories

Appropriate marking systems: WMB/Marking strips
(see Full Line Catalog, Volume 1, Section 13)

**End and separator plate,** 1.5 mm thick,



| without use of lock-out seal | | |
|---|---|---|
| orange | **2007-8892** | 50 (5x10) |
| gray | **2007-8891** | 50 (5x10) |

**End and separator plate,** 1.5 mm thick,



| for use of lock-out seal | | |
|---|---|---|
| orange | **2007-8894** | 50 (5x10) |
| gray | **2007-8893** | 50 (5x10) |

**Lock-out,**



| for disconnect link | | |
|---|---|---|
| yellow | **2007-8899** | 100 (5x20) |

**Locking cover,** transparent,



| mechanically locks multiple links | | |
|---|---|---|
| 1-pole | **282-881** | 50 (5x10) |
| 2-pole | **282-882** | 50 (5x10) |
| 3-pole | **282-883** | 50 (5x10) |
| 4-pole | **282-884** | 50 (5x10) |
| 5-pole | **282-885** | 50 (5x10) |
| 6-pole | **282-886** | 50 (5x10) |
| 7-pole | **282-887** | 50 (5x10) |
| 8-pole | **282-888** | 50 (5x10) |

**Jumper,** insulated,



| $I_N$ 30 A, orange | | |
|---|---|---|
| 2-way | **282-432** | 50 (5x10) |
| 3-way | **282-433** | 50 (5x10) |
| 4-way | **282-434** | 50 (5x10) |
| 5-way | **282-435** | 50 (5x10) |
| 6-way | **282-436** | 50 (5x10) |
| 7-way | **282-437** | 50 (5x10) |
| 8-way | **282-438** | 50 (5x10) |
| 9-way | **282-439** | 50 (5x10) |
| 10-way | **282-440** | 50 (5x10) |

**Jumper with safety lid,** insulated,



| $I_N$ 30 A, orange | | |
|---|---|---|
| 2-way | **282-432/100-000** | |
| 3-way | **282-433/100-000** | |
| 4-way | **282-434/100-000** | |
| | | 50 (5x10) |

**Interlocking link,**



| mechanically locks multiple links, 1 m/3'3" long | | |
|---|---|---|
| transparent | **210-254** | 1 |

**Jumper,** special design,



| $I_N$ 30 A, orange | | |
|---|---|---|
| 1-3-5 | **282-435/011-000** | |
| 1-3-5-7 | **282-437/011-000** | |
| | | 50 (5x10) |

**WMB Multi marking system,**



| 10 strips with 10 markers per card, for terminal widths 5 - 17.5 mm, yellow | | |
|---|---|---|
| k/l (50x) | **794-5553/000-002** | |
| | | 5 |

**WMB Multi marking system,**



| 10 strips with 10 markers per card, for terminal widths 5 - 17.5 mm, blue | | |
|---|---|---|
| U/V (50x) | **794-5554/000-006** | |
| | | 5 |