Karta danych technicznych
Grid conductor extension



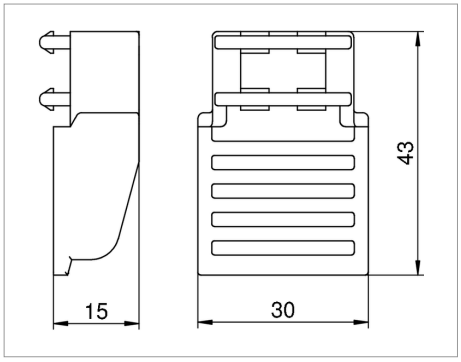

For additional lowering of a mounting box by max. 25 mm.

Type	Material symbol	Pack Units	Weight kg/100 pc.	Nr kat.
GES RV	PA	2	0.800	7407536

PA Polyamide price/