SIEMENS

Product data sheet 3RV1923-1CA00



MOULDED-PLASTIC ENCLOSURE FOR WALL MOUNTING
DEGREE OF PROTECTION IP55,
WITH N AND PE TERMINAL LOCKABLE IN 0 POSITION
54MM

Certificates/approvals:

General Product Approval	Declaration of Conformity	Test Certificates	
GOST	EG-Konf.	Special Test Certificate	Type Test Certificates/Test Report
Shipping Approval			
ABS	BUREAU VERITAS	RMRS	
other			
Confirmation	Declaration of Conformity	other	Environmental Confirmations

Further information:

Information- and Downloadcenter (Catalogs, Brochures,…)
http://www.siemens.com/industrial-controls/catalogs

Industry Mall (Online ordering system)
http://www.siemens.com/industrial-controls/mall

CAx-Online-Generator
http://www.siemens.com/cax

subject to modifications
© Copyright Siemens AG 2013

Service&Support (Manuals, Certificates, Characteristics, FAQs,...)
http://support.automation.siemens.com/WW/view/en/3RV1923-1CA00/all

Image database (product images, 2D dimension drawings, 3D models, device circuit diagrams, ...)
http://www.automation.siemens.com/bilddb/cax_en.aspx?mlfb=3RV1923-1CA00

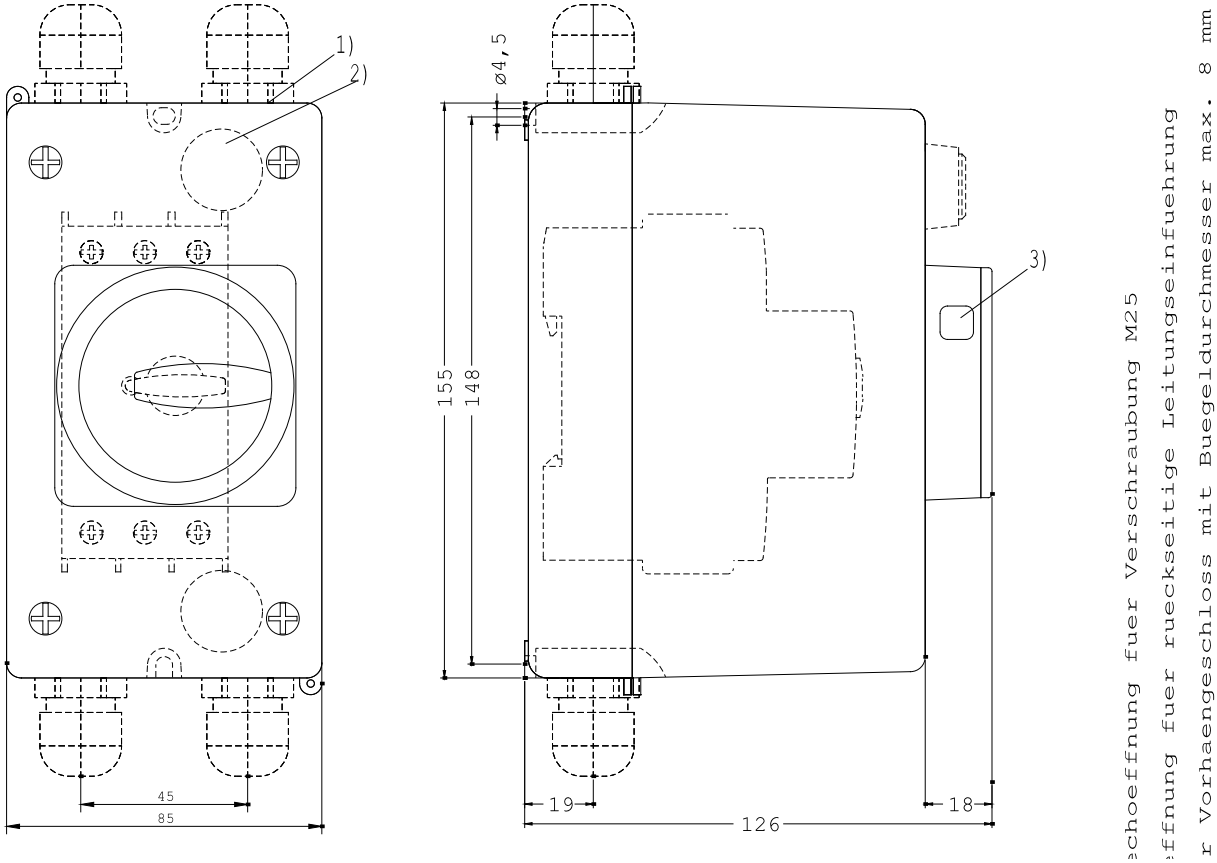

last change:

© Copyright Siemens AG 2013