Type: **M22–IVS**
Article No.: **216400**
Sales text **IVS mounting rail adapter**

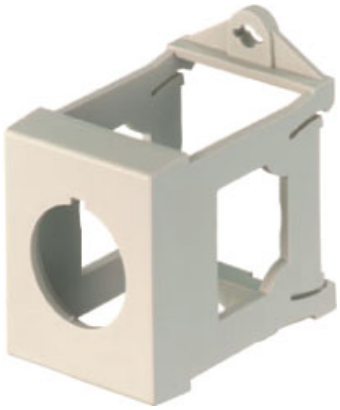

| Ordering information | | | |
|---|---|---|---|
| For use with | | | IEC/EN 60715 top–hat rail for front fixing |

## Dimensions

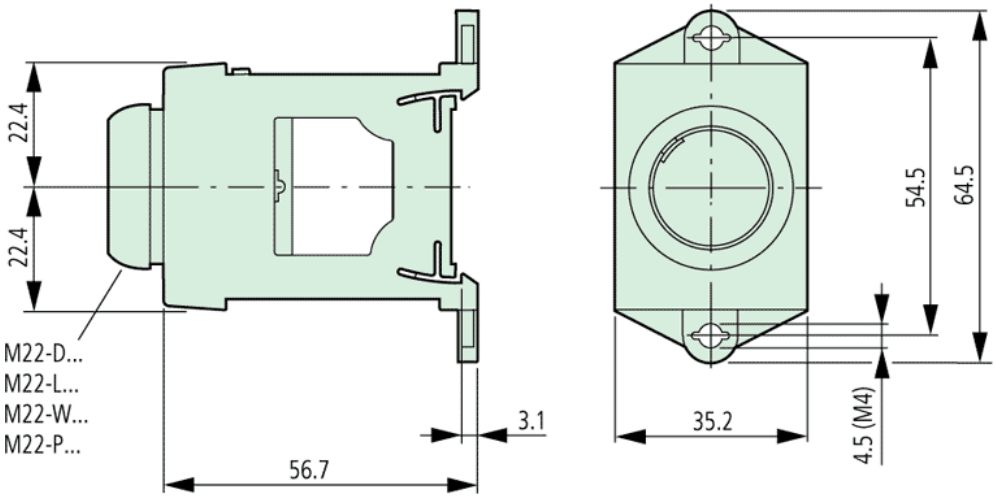


Moeller GmbH, Hein–Moeller–Str. 7–11, D–53115 Bonn
E–Mail: catalog@moeller.net, Internet: www.moeller.net, http://catalog.moeller.net
HPL–C2007G V2.1 © 2007 by Moeller GmbH