

Switch-disconnector, 4 p, 250A, frame size 2

Part no. LN2-4-250-I
Article no. 112007

Powering Business Worldwide

Delivery programme

Product range			Switch-disconnectors
Protective function			Disconnectors/main switches
Standard/Approval			IEC
Installation type			Fixed
Construction size			LN2
Description			Main switch characteristics including positive drive to IEC/EN 60204 and VDE 0113. Isolating characteristics to IEC/EN 60947-3 and VDE 0660. Busbar tag shroud to VDE 0160 Part 100.
Number of poles			4 pole
Standard equipment			Screw connection
Switch positions			I, +, 0
Rated current = rated uninterrupted current	$I_n = I_u$	A	250
Short-circuit protection max. fuse gL-characteristic		A gL	250

Technical data

Switch-disconnectors

Rated surge voltage invariability	U_{imp}		
Main contacts		V	8000
Auxiliary contacts		V	6000
Rated operational voltage	Ue	V AC	690
Rated current = rated uninterrupted current	$I_n = I_u$	A	250
Overvoltage category/pollution degree			III/3
Rated insulation voltage	U_i	V	690
Use in unearthed supply systems		V	690
			Rated operating voltage: 40-60 Hz

Rated short-circuit making capacity

690 V 50/60 H	Ic	kA	5.5

Rated short-time withstand current

t = 0.3 s	I_{cw}	kA	3.5
t = 1 s	I_{cw}	kA	3.5

Rated conditional short-circuit current

With back-up fuse		A gG/gL	PN2(N2)-160…250: 250
400 … 415 V		kA	100
690 V		kA	80
With downstream fuse		A gG/gL	PN2(N2)-160…250: 250
400 … 415 V		kA	100
690 V		kA	80

Rated making and breaking capacity

Rated operational current	I_e	A	
415 V	I_e	A	250
690 V	I_e	A	250
415 V	I_e	A	250
690 V	I_e	A	250
Lifespan, mechanical	Operations		20000
Max. operating frequency		Ops/h	120

Lifespan, electrical

400 V 50/60 Hz	Operations		7500
415 V 50/60 Hz	Operations		7500
690 V 50/60 Hz	Operations		5000

400 V 50/60 Hz	Operations		6000
415 V 50/60 Hz	Operations		6000
690 V 50/60 Hz	Operations		4000
			For current heat loss per pole the specification refers to the maximum rated operational current of the frame size.
Current heat losses per pole at I_u are based on the maximum rated operational current of the frame size.		W	16
			For current heat loss per pole the specification refers to the maximum rated operational current of the frame size.
Total downtime in a short-circuit		ms	< 10

Terminal capacity

Standard equipment			Screw connection
Overview			Basic equipment Box terminal ● - - - Screw connection - ● ● ● accessory consideration Box terminals - ● ● - Screw connection ● - - ● Tunnel terminal ● ● ● ● connection on rear ● ● ● ● Strip terminal - - - ●
Round copper conductor			
Box terminal			
Solid		mm^2	1 x (4 - 16) 2 x (4 - 16)
Stranded		mm^2	1 x (25 - 185) 2 x (25 - 70)
Tunnel terminal			
Solid		mm^2	1 x (16 - 185)
Stranded		mm^2	
Stranded		mm^2	1 x (25 - 185)
Bolt terminal and rear-side connection			
Direct on the switch			
Solid		mm^2	1 x (4 - 16) 2 x (4 - 16)
Stranded		mm^2	1 x (25 - 185) 2 x (25 - 70)
Al conductors, Cu cable			
Solid		mm^2	1 x 16
Stranded		mm^2	
Stranded		mm^2	1 x (25 - 185)
Bolt terminal and rear-side connection			
Flat copper strip, with holes	min.	mm	2 x 16 x 0.8
Flat copper strip, with holes	max.	mm	10 x 16 x 0.8
Cu strip (number of segments x width x segment thickness)			
Box terminal			
	min.	mm^2	2 x 9 x 0.8
	max.	mm^2	10 x 16 x 0.8
Bolt terminal and rear-side connection			
Flat copper strip, with holes	min.	mm	2 x 16 x 0.8
Flat copper strip, with holes	max.	mm	10 x 16 x 0.8
Copper busbar (width x thickness)	mm		
Bolt terminal and rear-side connection			

Screw connection			M8
Direct on the switch			
	min.	mm^2	16 x 5
	max.	mm^2	20 x 5
Control cables			
		mm^2	1 x (0.75 - 2.5) 2 x (0.75 - 1.5)

Data for design verification according to IEC/EN 61439

Technical data for design verification			
Rated operational current for specified heat dissipation	I_n	A	250
Equipment heat dissipation, current-dependent	P_{vid}	W	48
IEC/EN 61439 design verification			
10.2 Strength of materials and parts			
10.2.2 Corrosion resistance			Meets the product standard's requirements.
10.2.3.1 Verification of thermal stability of enclosures			Meets the product standard's requirements.
10.2.3.2 Verification of resistance of insulating materials to normal heat			Meets the product standard's requirements.
10.2.3.3 Verification of resistance of insulating materials to abnormal heat and fire due to internal electric effects			Meets the product standard's requirements.
10.2.4 Resistance to ultra-violet (UV) radiation			Meets the product standard's requirements.
10.2.5 Lifting			Does not apply, since the entire switchgear needs to be evaluated.
10.2.6 Mechanical impact			Does not apply, since the entire switchgear needs to be evaluated.
10.2.7 Inscriptions			Meets the product standard's requirements.
10.3 Degree of protection of ASSEMBLIES			Does not apply, since the entire switchgear needs to be evaluated.
10.4 Clearances and creepage distances			Meets the product standard's requirements.
10.5 Protection against electric shock			Does not apply, since the entire switchgear needs to be evaluated.
10.6 Incorporation of switching devices and components			Does not apply, since the entire switchgear needs to be evaluated.
10.7 Internal electrical circuits and connections			Is the panel builder's responsibility.
10.8 Connections for external conductors			Is the panel builder's responsibility.
10.9 Insulation properties			
10.9.2 Power-frequency electric strength			Is the panel builder's responsibility.
10.9.3 Impulse withstand voltage			Is the panel builder's responsibility.
10.9.4 Testing of enclosures made of insulating material			Is the panel builder's responsibility.
10.10 Temperature rise			The panel builder is responsible for the temperature rise calculation. Eaton will provide heat dissipation data for the devices.
10.11 Short-circuit rating			Is the panel builder's responsibility. The specifications for the switchgear must be observed.
10.12 Electromagnetic compatibility			Is the panel builder's responsibility. The specifications for the switchgear must be observed.
10.13 Mechanical function			The device meets the requirements, provided the information in the instruction leaflet (IL) is observed.

Technical data ETIM 5.0

Low-voltage industrial components (EG000017) / Switch disconnector (EC000216)			
Electric engineering, automation, process control engineering / Low-voltage switch technology / Off-load switch, circuit breaker, control switch / Switch disconnector (ecl@ss8-27-37-14-03 [AKF060009])			
Version as switch disconnector compact			Yes
Version as main switch			Yes
Version as maintenance-/service switch			Yes
Version as safety switch			No
Version as emergency stop installation			Yes
Max. rated operation voltage Ue AC		V	400
Rated permanent current Iu		A	250
Rated operation power AC-3, 400 V		kW	132
Rated operation power at AC-23, 400 V		kW	132
Conditioned rated short-circuit current Iq		kA	100
Number of poles			4

Number of auxiliary contacts as normally closed contact	0
Number of auxiliary contacts as normally open contact	0
Number of auxiliary contacts as change-over contact	0
Motor drive optional	Yes
Motor drive integrated	No
Voltage release optional	Yes
Device construction	Built-in device fixed built-in technique
Suitable for ground mounting	Yes
Suitable for front mounting	No
Suitable for front mounting center	No
Suitable for distribution board installation	Yes
Suitable for intermediate mounting	Yes
Type of control element	Rocker lever
Interlockable	Yes
Connection type main current circuit	Screw connection
Degree of protection (IP), front side	IP20

Dimensions

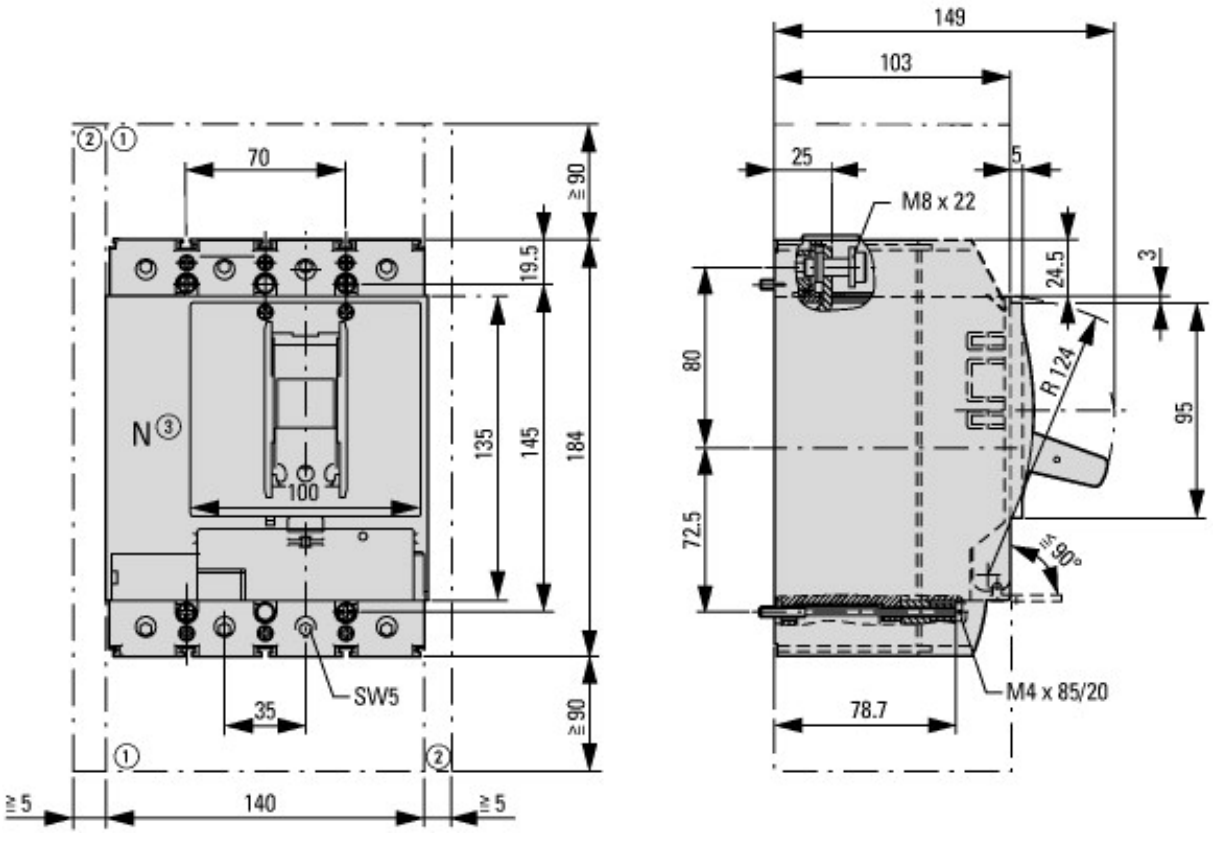

① Blow out area, minimum clearance to other parts

② Minimum clearance to adjacent parts

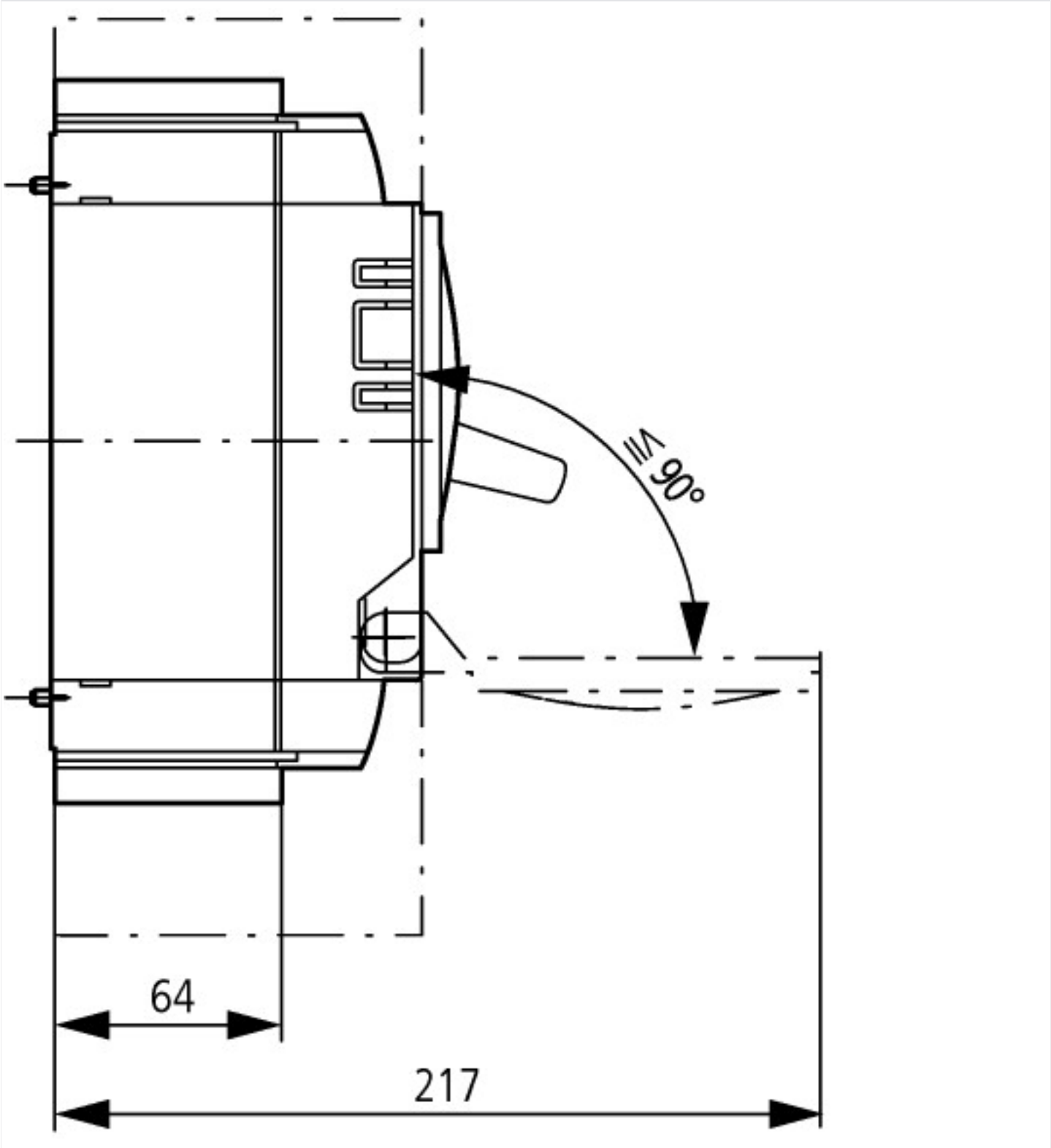

Additional product information (links)

IL01206012Z circuit-breaker LZMB2, switch-disconnector LN2	
IL01206012Z circuit-breaker LZMB2, switch-disconnector LN2	ftp://ftp.moeller.net/DOCUMENTATION/AWA_INSTRUCTIONS/IL01206012Z2013_08.pdf

© 12/2014 by Eaton Industries GmbH