

Adjustable roller lever, D=18mm, metal

Part no. LSM-XRLA
Article no. 266160
Catalog No. LSM-XRLA

Powering Business Worldwide

Delivery programme

Basic function			Operating heads
Part group reference			LS(M)-…
Product range			Adjustable roller lever
Diameter	⌀	mm	18
For use with			Basic devices LS(M)…

Notes The operating head can be rotated at 90° intervals to adapt to the specified approach direction.

Data for design verification according to IEC/EN 61439

Technical data for design verification			
Rated operational current for specified heat dissipation	I_n	A	0
Heat dissipation per pole, current-dependent	P_{vid}	W	0
Equipment heat dissipation, current-dependent	P_{vid}	W	0
Static heat dissipation, non-current-dependent	P_{vs}	W	0
Heat dissipation capacity	P_{diss}	W	0
IEC/EN 61439 design verification			
10.2 Strength of materials and parts			
10.2.2 Corrosion resistance			Meets the product standard's requirements.
10.2.3.1 Verification of thermal stability of enclosures			Meets the product standard's requirements.
10.2.3.2 Verification of resistance of insulating materials to normal heat			Meets the product standard's requirements.
10.2.3.3 Verification of resistance of insulating materials to abnormal heat and fire due to internal electric effects			Meets the product standard's requirements.
10.2.4 Resistance to ultra-violet (UV) radiation			Please enquire
10.2.5 Lifting			Does not apply, since the entire switchgear needs to be evaluated.
10.2.6 Mechanical impact			Does not apply, since the entire switchgear needs to be evaluated.
10.2.7 Inscriptions			Meets the product standard's requirements.
10.3 Degree of protection of ASSEMBLIES			Does not apply, since the entire switchgear needs to be evaluated.
10.4 Clearances and creepage distances			Meets the product standard's requirements.
10.5 Protection against electric shock			Does not apply, since the entire switchgear needs to be evaluated.
10.6 Incorporation of switching devices and components			Does not apply, since the entire switchgear needs to be evaluated.
10.7 Internal electrical circuits and connections			Is the panel builder's responsibility.
10.8 Connections for external conductors			Is the panel builder's responsibility.
10.9 Insulation properties			
10.9.2 Power-frequency electric strength			Is the panel builder's responsibility.
10.9.3 Impulse withstand voltage			Is the panel builder's responsibility.
10.9.4 Testing of enclosures made of insulating material			Is the panel builder's responsibility.
10.10 Temperature rise			Not applicable.
10.11 Short-circuit rating			Is the panel builder's responsibility. The specifications for the switchgear must be observed.
10.12 Electromagnetic compatibility			Is the panel builder's responsibility. The specifications for the switchgear must be observed.
10.13 Mechanical function			The device meets the requirements, provided the information in the instruction leaflet (IL) is observed.

Technical data ETIM 5.0

Sensors (EG000026) / Drive head for position switches/hinge switches (EC001483)
Electric engineering, automation, process control engineering / Binary sensor technology, safety-related sensor technology / Position switch / Drive head for position switches (ecl@ss8-27-27-06-04 [BAA083008])

Type of control element	Adjustable roller lever

Approvals

Product Standards	IEC/EN 60947-5; UL 508; CSA-C22.2 No. 14; CE marking
UL File No.	E29184
UL Category Control No.	NKCR
CSA File No.	12528
CSA Class No.	3211-03
North America Certification	UL listed, CSA certified

Dimensions

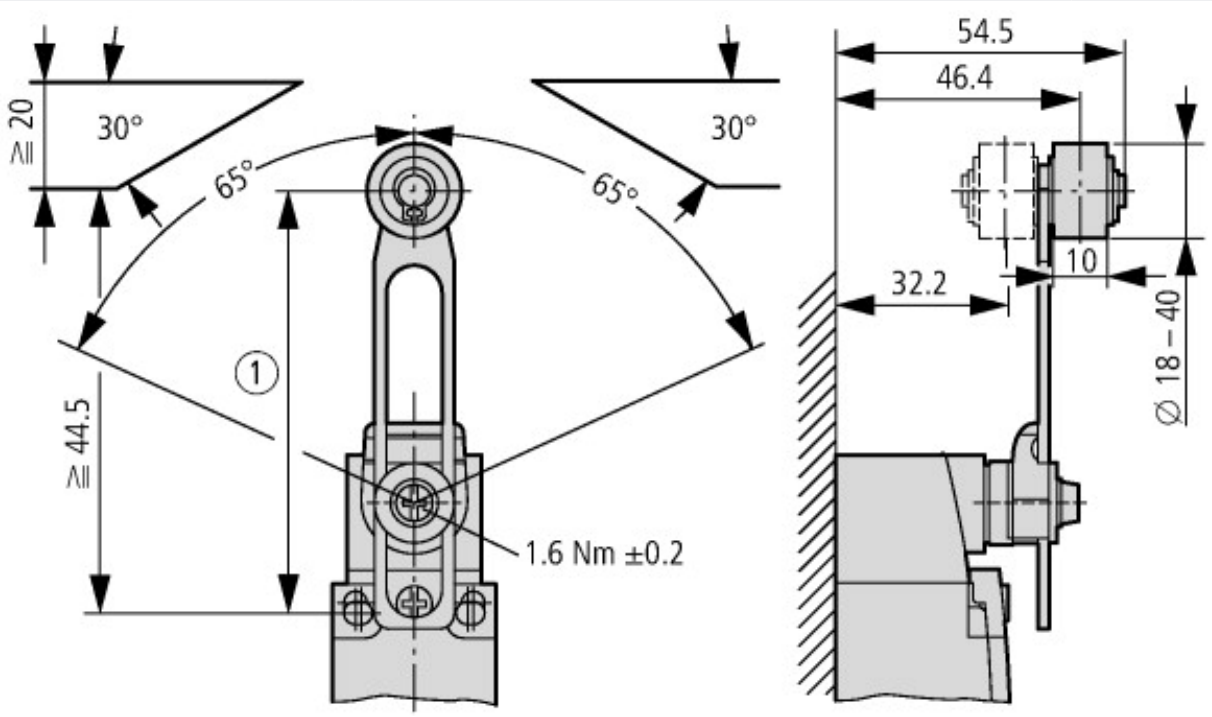

① Setting range of 54.5 to 97

© 12/2014 by Eaton Industries GmbH