MOELLER

Type: **DILM400–XHB**
Article No.: **208287**
Sales text **Terminal shroud for DILM185–400**

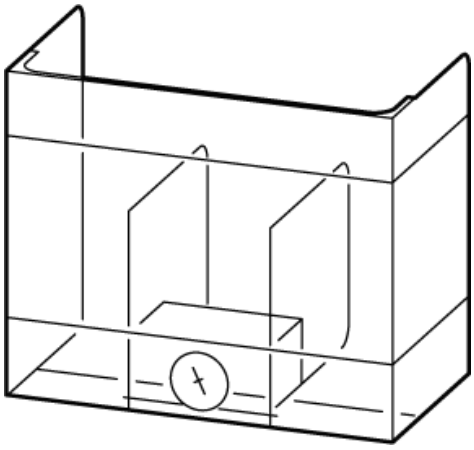

Terminal cover

Ordering information			
For use with			DILM185 DILM225 DILM250 DILM300 DILM400

Notes concerning the product group

Protection against direct contact with connection lugs when touched vertically from the front

Contactors with terminal shrouds

Dimensions

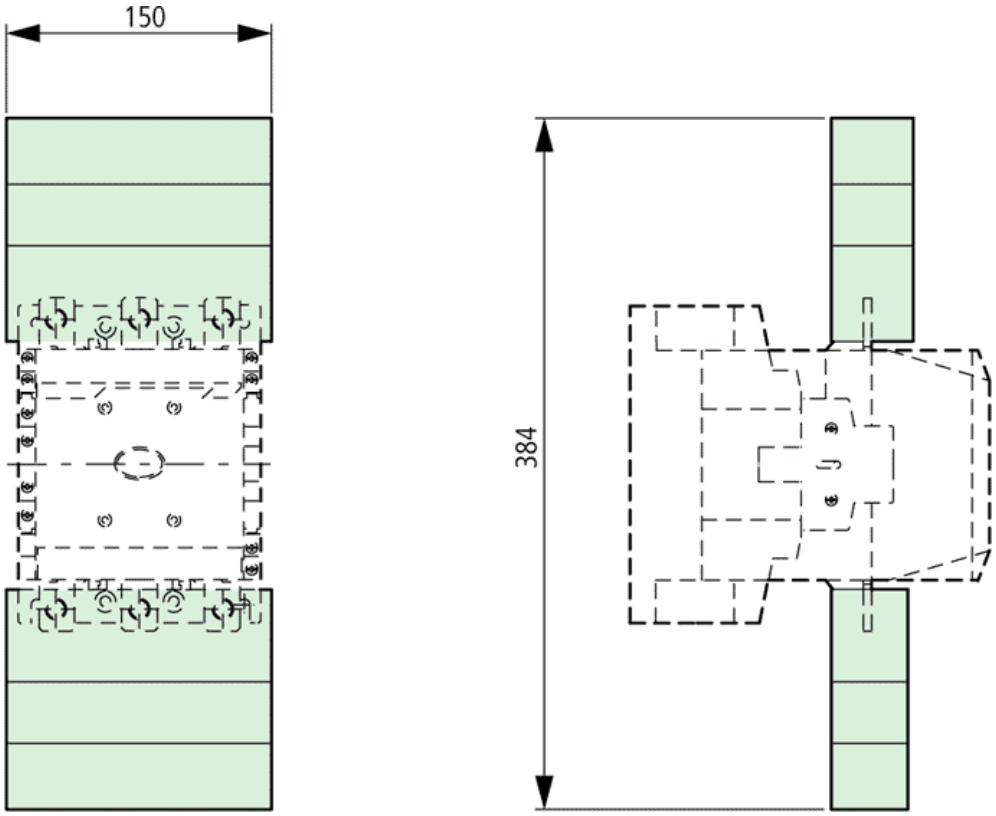

Dimensions

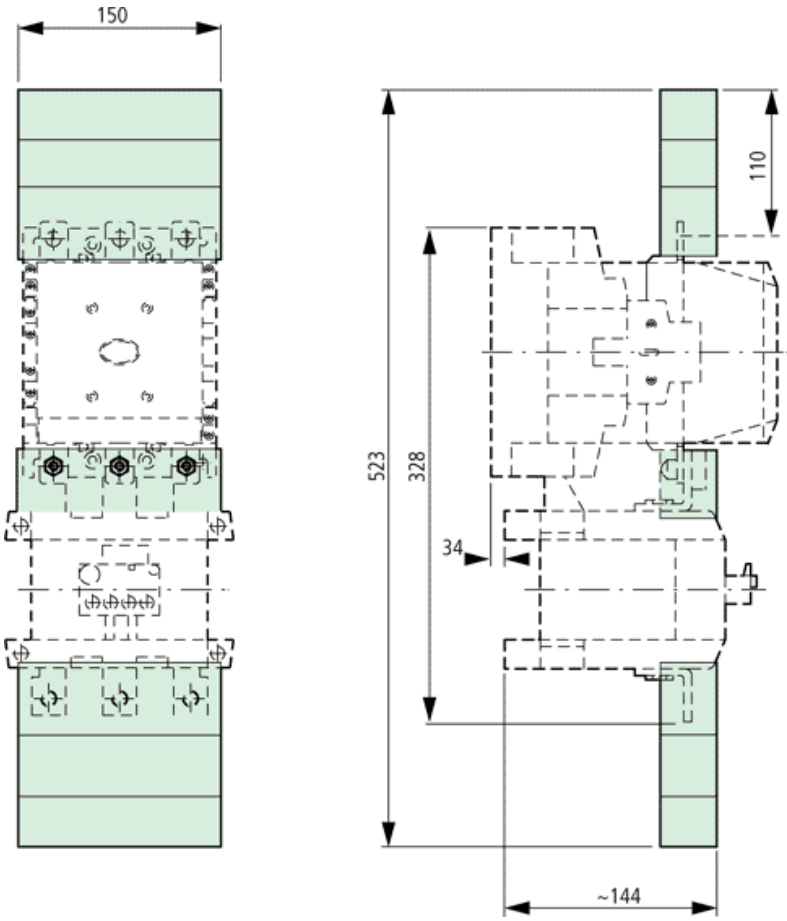

Moeller GmbH, Hein−Moeller−Str. 7−11, D−53115 Bonn
E−Mail: catalog@moeller.net, Internet: www.moeller.net, http://catalog.moeller.net
HPL−C2007G V2.1 © 2007 by Moeller GmbH