

Clamp terminal 95-185mm^2, for 20x5-30x10

Part no. AKS185
Article no. 107195

Catalog No.

Powering Business Worldwide™

Delivery programme

Product range			60 mm system 185 mm system
Basic function			Connections
Subrange			Clamp terminals
Description			Termination to busbars without drilling A cable block is used to connect the conductor to the busbar
Width		mm	38
Rated operational current	I_e	CSA	500
Copper strip		mm	95 - 185 mm^2 AWG3/0 - MCM 350. directly terminated,
Cu factor		kg	0,00
For use with			20 x 5/10 25 x 5/10 30 x 5/10
For use with			Double T profile

Notes

round conductor, solid

Flexible, round conductor with correctly crimped ferrule

Round conductor, stranded

Section conductor, solid

Sector conductor, stranded

CU band

CU busbar

Approvals

Product Standards	UL508A; CSA-C22.2 No. 14; IEC 60439-1; CE marking
UL File No.	E307559
UL Category Control No.	NMTR2, NMTR8
CSA File No.	236217
CSA Class No.	3211-37
North America Certification	UL recognized, CSA certified
Conditions of Acceptability	Refer to approbation report
Specially designed for North America	No
Suitable for	Feeder circuits
Current Limiting Circuit-Breaker	Refer to approbation report
Max. Voltage Rating	600 V AC
Degree of Protection	Feeder circuits

Dimensions

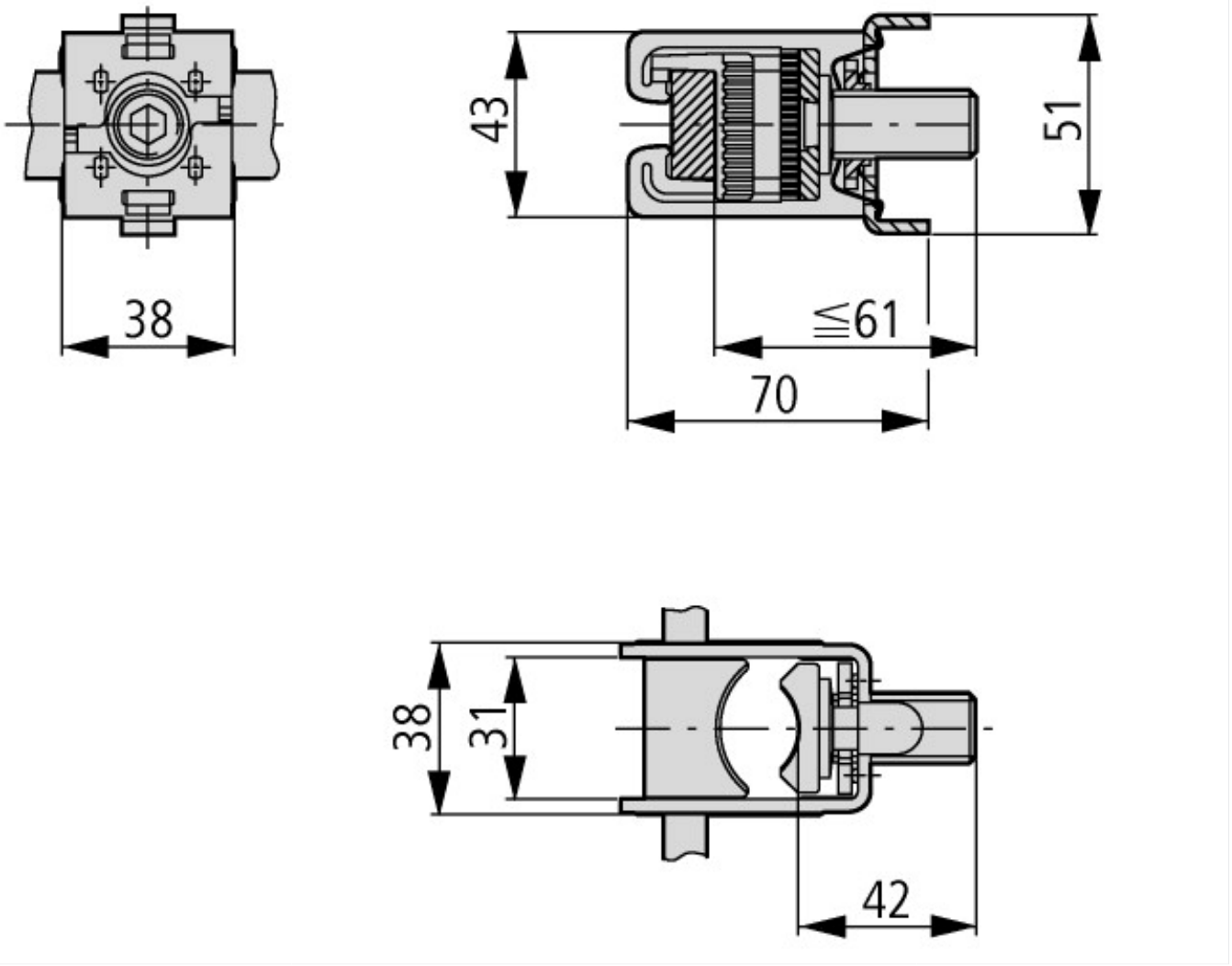

© 02/2014 by Eaton Industries GmbH