

Front element, +USB 2.0 A/A, with connection cable

Part no. M22-USB-SA
Article no. 107412
Catalog No. M22-USB-SAQ

Powering Business Worldwide

Delivery programme

Product range			RMQ-Titan (drilling dimensions 22.5 mm)
Accessories			General accessories
Basic function			Accessories
Basic function accessories			Bulkhead interface, USB socket
Single unit/Complete unit			Single unit
Degree of Protection			IP65 (with closed cover) IP20 (with plug connected)
For use with			Front mounting Type A socket with prefabricated cable (60 cm) with permanently connected USB 3.0, Type A plug
Front ring			Front ring: titanium
Connection to SmartWire-DT			no
Terminal diagram / contact assignment			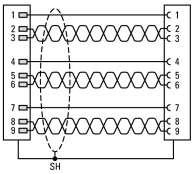
			SH: Schirmung

Approvals

Product Standards	UL 508; CSA-C22.2 No. 142; IEC/EN 6113-2; CE marking
UL File No.	E330994
UL Category Control No.	DUXR, DUXR7
CSA File No.	UL report applies to both US and Canada
CSA Class No.	-
North America Certification	UL listed, certified by UL for use in Canada
Degree of Protection	IEC: IP65 and UL/CSA NEMA Type 12 when closed, IP20 when connected

Technical data

Nominal voltage	U_L		AC/DC 5V
Voltage range			Max. 30 V
Rated current		mA	900
Pole			9
Baud rate		kBd	Max. 5 Gbit/s
Class / category			3.0
Contact type art			1 : 1
Screen earth kit			yes

General

Design			USB 3.0 A
Insulation resistance	R_{ISO}	MΩ	> 100
Volume resistance			< 30 mΩ
Contact material			CuSn, gold-plated
Mounting			Front panel cutout d = 22.5 mm
Mounting depth:		mm	ca. 70 (incl. Krümmung)

Cable sheath			PVC
Outer cable diameter		mm	6.1
Bending radius			15 x Cable diameter
Ambient temperature		°C	- 20 - + 70
Storage		°C	- 25 - + 80
Lifespan, mechanical	Operations		> 100 insertion cycles
Weight		kg/piece	0.044

Data for design verification according to IEC/EN 61439

IEC/EN 61439 design verification			
10.2 Strength of materials and parts			
10.2.2 Corrosion resistance			Meets the product standard's requirements.
10.2.3.1 Verification of thermal stability of enclosures			Meets the product standard's requirements.
10.2.3.2 Verification of resistance of insulating materials to normal heat			Meets the product standard's requirements.
10.2.3.3 Verification of resistance of insulating materials to abnormal heat and fire due to internal electric effects			Meets the product standard's requirements.
10.2.4 Resistance to ultra-violet (UV) radiation			Please enquire
10.2.5 Lifting			Does not apply, since the entire switchgear needs to be evaluated.
10.2.6 Mechanical impact			Does not apply, since the entire switchgear needs to be evaluated.
10.2.7 Inscriptions			Meets the product standard's requirements.
10.3 Degree of protection of ASSEMBLIES			Does not apply, since the entire switchgear needs to be evaluated.
10.4 Clearances and creepage distances			Meets the product standard's requirements.
10.5 Protection against electric shock			Does not apply, since the entire switchgear needs to be evaluated.
10.6 Incorporation of switching devices and components			Does not apply, since the entire switchgear needs to be evaluated.
10.7 Internal electrical circuits and connections			Is the panel builder's responsibility.
10.8 Connections for external conductors			Is the panel builder's responsibility.
10.9 Insulation properties			
10.9.2 Power-frequency electric strength			Is the panel builder's responsibility.
10.9.3 Impulse withstand voltage			Is the panel builder's responsibility.
10.9.4 Testing of enclosures made of insulating material			Is the panel builder's responsibility.
10.10 Temperature rise			The panel builder is responsible for the temperature rise calculation. Eaton will provide heat dissipation data for the devices.
10.11 Short-circuit rating			Is the panel builder's responsibility. The specifications for the switchgear must be observed.
10.12 Electromagnetic compatibility			Is the panel builder's responsibility. The specifications for the switchgear must be observed.
10.13 Mechanical function			The device meets the requirements, provided the information in the instruction leaflet (IL) is observed.

Technical data ETIM 5.0

Low-voltage industrial components (EG000017) / Accessories for control circuit devices (EC002024)			
Electric engineering, automation, process control engineering / Low-voltage switch technology / Low-voltage switch technology (accessories) / Control circuit devices (accessories) (ecl@ss8-27-37-92-16 [ACO043007])			
Type of electrical accessory			-
Type of mechanical accessory			-

Characteristics

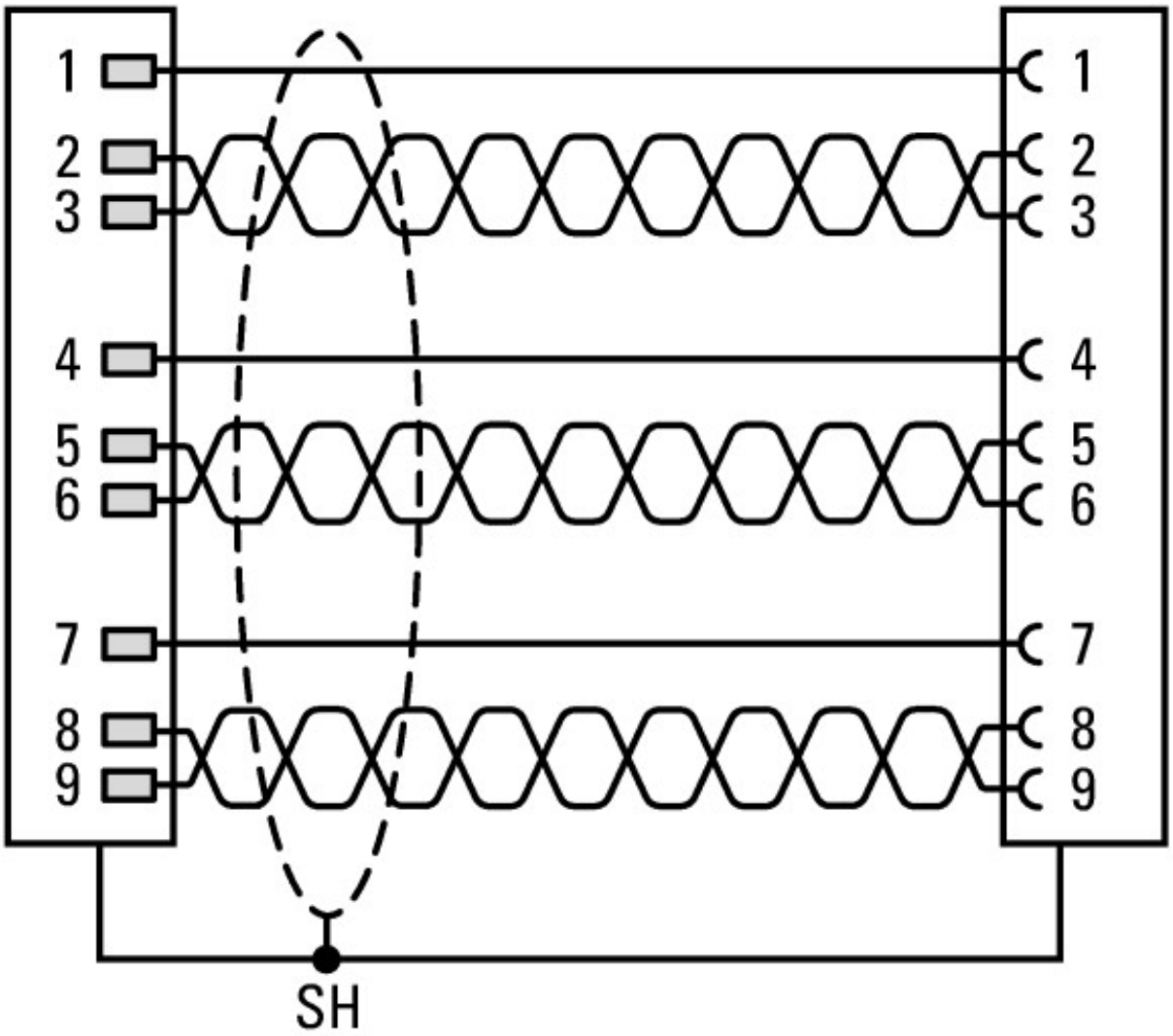

SH: Schirmung

Dimensions

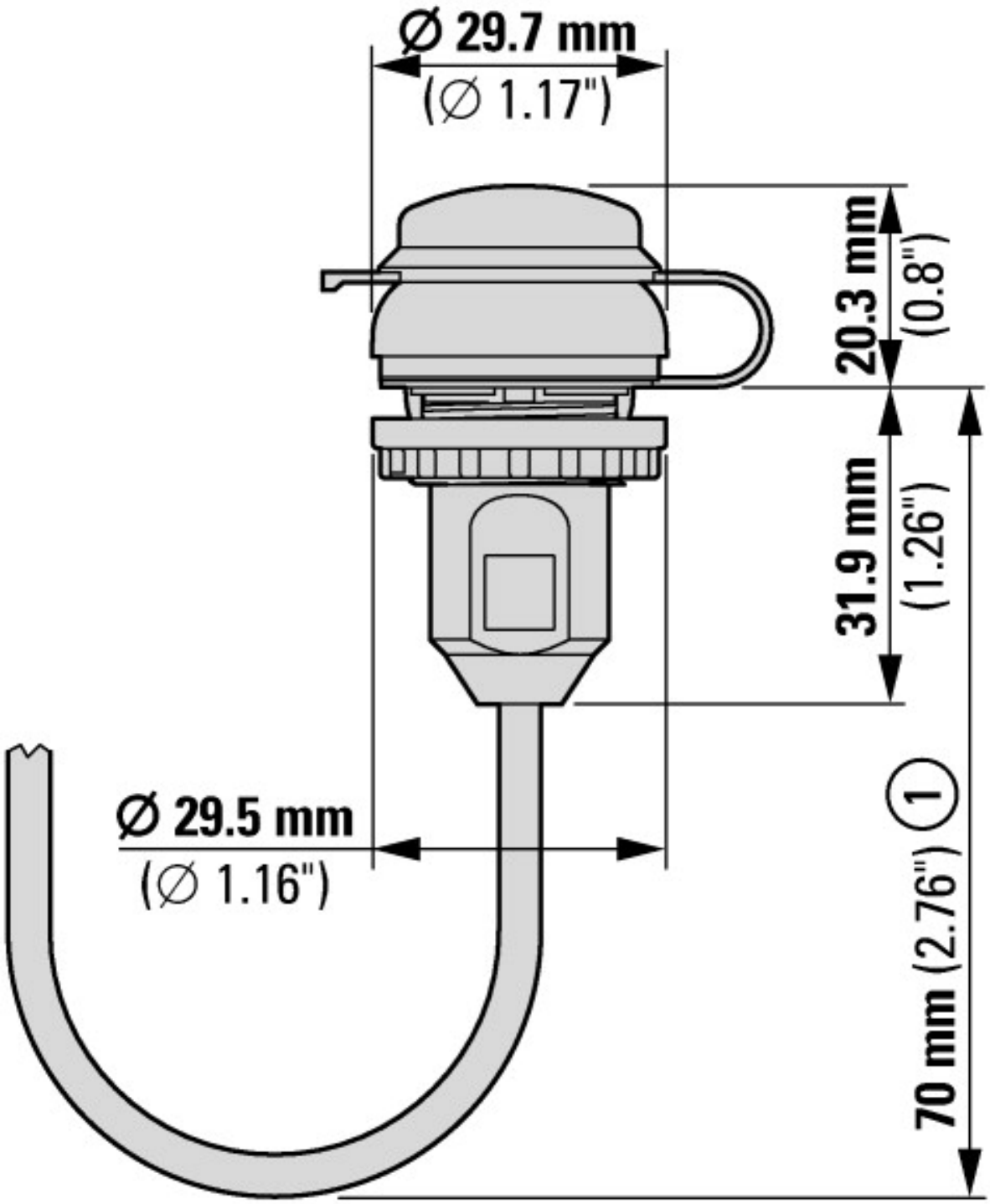

① Installation depth

Additional product information (links)

IL04716002Z (AWA1160-1745) RMQ-Titan System	
IL04716002Z (AWA1160-1745) RMQ-Titan System	ftp://ftp.moeller.net/DOCUMENTATION/AWA_INSTRUCTIONS/IL04716002Z2013_08.pdf

© 10/2014 by Eaton Industries GmbH