

DS7 soft starter, 24 V AC/DC, 70 A

Part no. DS7-340SX070N0-N

Article no. 134918

Powering Business Worldwide™

Delivery programme

Function			Soft starters for three-phase loads
Mains supply voltage (50/60 Hz)	U_{LN}	V AC	200 - 480
Supply voltage			24 V AC/DC
Control voltage	U_C		24 V AC 24 V DC
Rated operational current			
Device (AC-53)	I_e	A	70
Assigned motor rating			
at 400 V, 50 Hz	P	kW	37
at 480 V, 60 Hz	KP	HP	50
Derating factor class 20			0.55

Approvals

Product Standards	IEC/EN 60947-4-2; GB 14048.6; UL 508; CSA-C22.2 No 0-M91; CSA-C22.2 No 14-05 CE marking
NA Certification	Request filed for UL and CSA
Specially designed for NA	No
Suitable for	Branch circuits
Current Limiting CB	No
Max. Voltage Rating	480 V
Degree of Protection	IP20; UL/CSA Type 1

General

Standards			IEC/EN 60947-4-2
Climatic proofing			damp heat, constant, according to IEC 60068-2-3, damp heat, cyclic, according to IEC 60068-2-10
Ambient temperature		°C	-5 - +40°C up to 60°C at 2 % derating per Kelvin temperature rise
Ambient temperature, storage		°C	- 25 - 60
Altitude		m	0 - 1000 m, above that 1 % derating per 100 m , up to 2000 m
Mounting position			Vertical
Protection type			IP20
Degree of protection applies to the front/operating elements. Protection from all sides is IP00.			
Integrated			Protection type IP40 can be achieved on all sides with covers from the NZM range.
Protection against direct contact			Finger- and back-of-hand proof
Overvoltage category/pollution degree			II/2
Shock resistance			8 g/11 ms
Vibration resistance to EN 60721-3-2			2M2
Average heat dissipation at rated load cycle		W	13
Dimensions (W x H x D)		mm	45 x 150 x 118
Radio interference level			B
Weight		kg	1.8

Main conducting paths

Rated operating voltage	U_e	V AC	200 - 480
Supply frequency		Hz	50/60
Rated operational current	I_e	A	
AC-53 (motor loads)	I_e	A	70
Assigned motor rating (standard connection)			
at 230 V, 50 Hz	P	kW	15
at 400 V, 50 Hz	P	kW	37
200 V	KP	HP	20

at 230 V, 60 Hz	P	HP	25
at 480 V, 60 Hz	KP	HP	50
Overload cycle to IEC/EN 60947-4-2			
AC-53a (without bypass)			70

Terminal capacities

Cables (box terminal)			
Solid		mm^2	1 x (25 - 70) 2 x (6 - 25)
Stranded		mm^2	1 x (25 - 70) 2 x (6 - 25)
Solid or stranded		AWG	1 x (12 - 2/0)
Flat conductor		mm	
	min.	mm	2 x 9 x 0.8
	max.	mm	9 x 9 x 0.8
Control cables			
Solid		mm^2	1 x (0.5 - 2.5) 2 x (0.5 - 1.0)
Flexible with ferrule		mm^2	1 x (0.5 - 1.5) 2 x (0.5 - 0.75)
Stranded		mm^2	1 x (0.5 - 1.5) 2 x (0.5 - 1.0)
Solid or stranded		AWG	1 x (21 - 14) 2 x (21 - 18)
Tightening torque		Nm	0.4
Screwdriver (flat blade)		mm	0,6 x 3,5

Power section

Rated impulse withstand voltage	U_{imp}	kV	4
Rated insulation voltage	U_i	V AC	500
Short-circuit rating			
Type “1” coordination			
at AC-53a: 3…5 : 75…10			NZMN1-M80
Type “2” coordination short-circuit rating (additional with the fuses for coordination type “1”)			3 x 20.610.32-200
Fuse holders			3 x 21.313.02

Control circuit

Regulator supply voltage			
Voltage	U_s	V	24 V AC/DC +10 %/- 15 %
Current consumption at no load 24 V DC		mA	35
Current consumption in operation at 24 V DC		mA	65
Current consumption at peak performance (close bypass) at 24 V DC		mA/ ms	600/50
Control voltage			
AC operated		V AC	24 V AC/DC +10 %/- 15 %
Current consumption at 230 V DC		mA	14
Pick-up voltage		x U_s	
DC-operated		V DC	+ 17.3 - 27
Drop-out voltage	x U_s	V	
DC operated		V DC	0 - 3
Pick-up time			
AC operated		ms	250
Drop-out time			
AC operated		ms	190
Relay outputs			
Number			2 (TOR)
Voltage range		V AC	250
AC-1 current range		A	3 A, AC-1

Soft start function

Ramp times			
Acceleration		s	1 - 30
Deceleration		s	0 - 30
Start voltage (= turn-off voltage)		%	30 - 100
Voltage reduction at stop		%	
Voltage reduction at stop min.		%	8

Notes

Rated impulse withstand voltage:

- 1.2 µs/50 µs (rise time/fall time of the pulse to IEC/EN 60947-2 or -3)
- Applies for control circuit/power section/enclosure

Dimensions

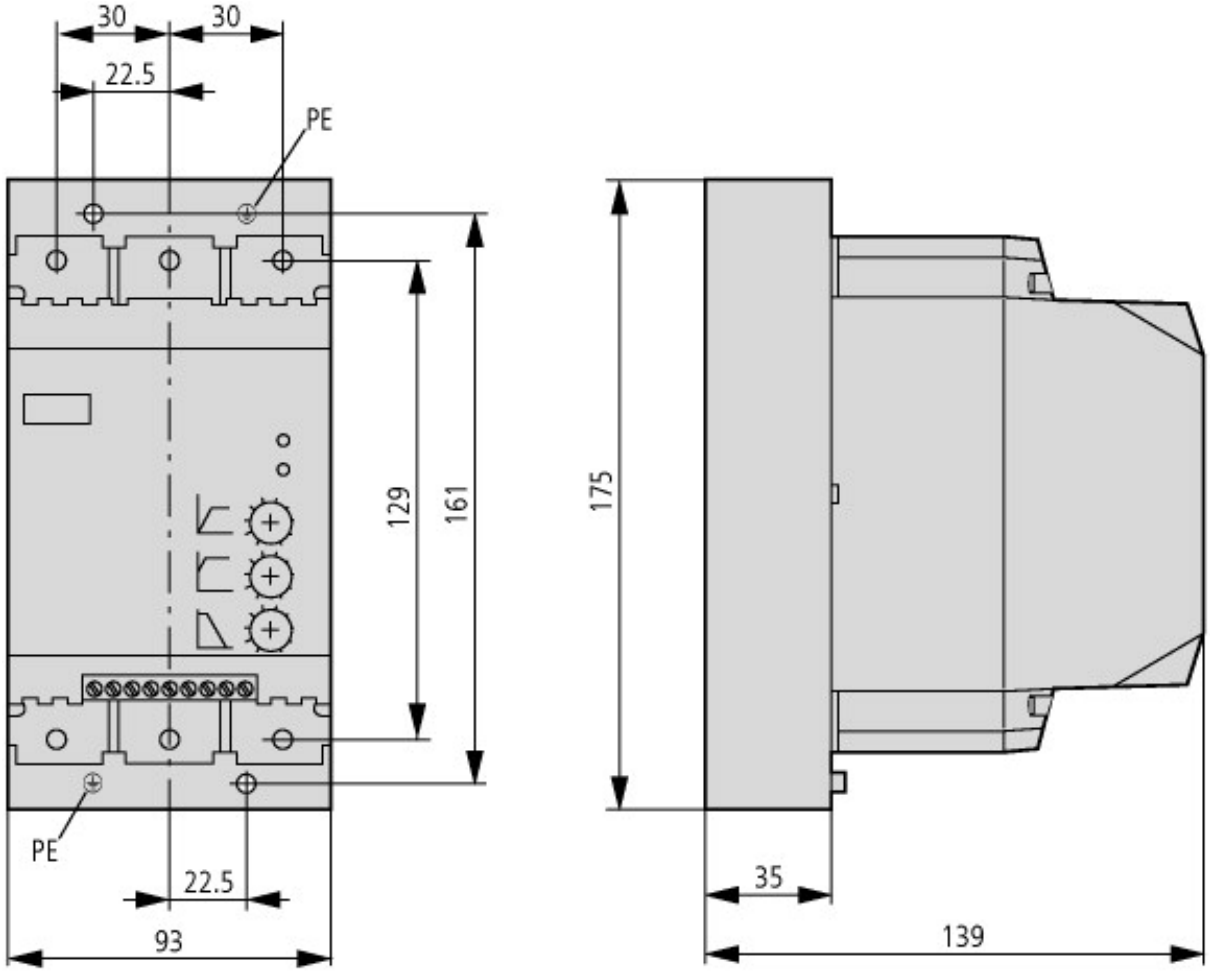

© 05/2012 by Eaton Industries GmbH